Connectors
for Timber and Masonry Construction

C-C-UK-2023 | 01827 255600 | strongtie.co.uk

SIMPSON Strong-Tie®

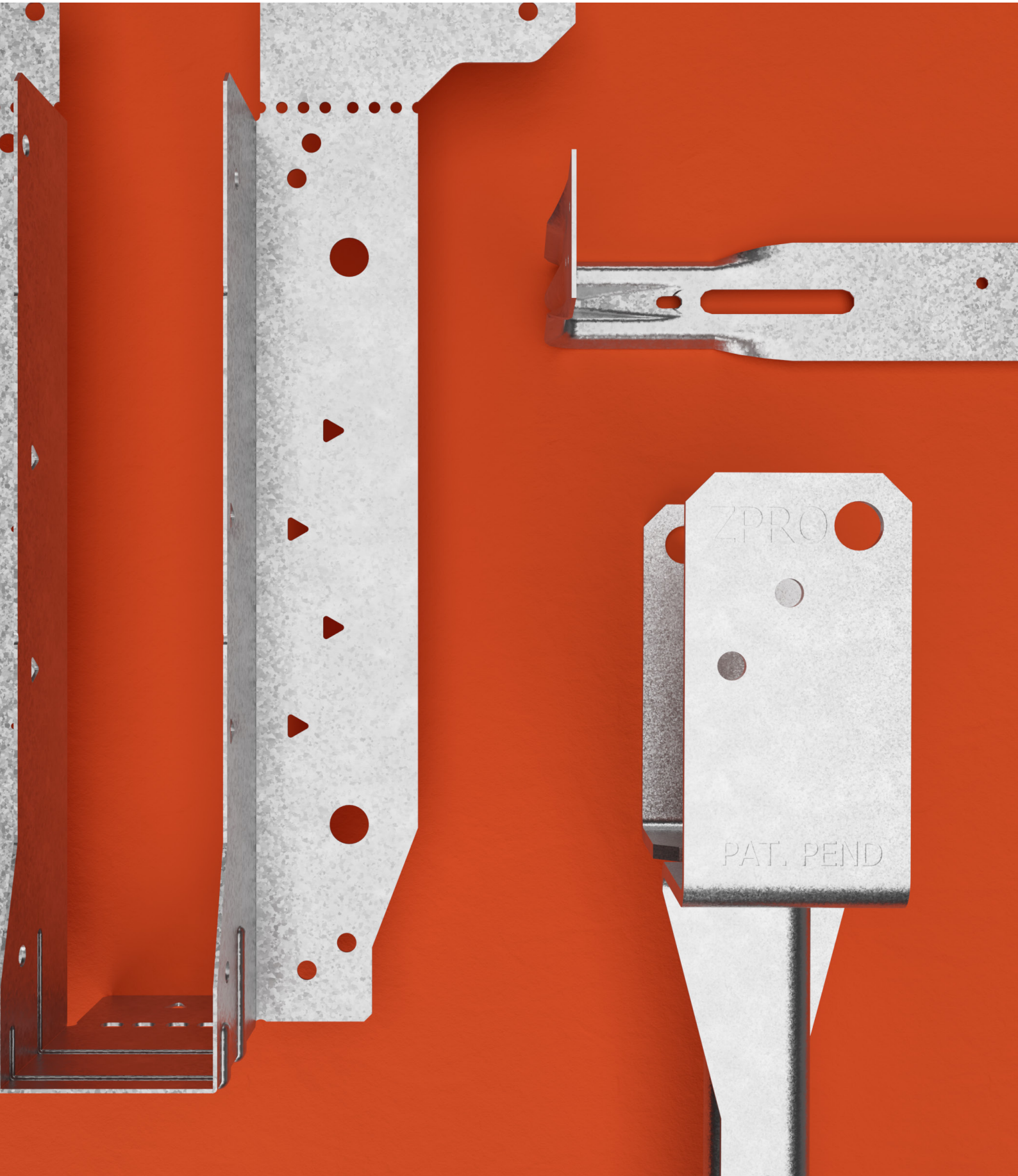

Technical Support

Looking for product or installation advice? Speak to the people who actually design our connectors.

Stock Availability

Our distribution centres in Dublin, Edinburgh and Tamworth maintain a stock of over 4,000 product lines.

UK Manufacturing

The majority of our connectors are manufactured at our purpose built facility in Tamworth, Staffordshire.

Product Testing

Quality is designed and built into everything we make, with a UKAS accredited Test laboratory to ensure it.

Research and Design

We continuously invest in the development of solutions that are efficient and easy to install.

Made to Measure

Need something special? Try our speedy custom fabrication service. Your specification. Our standard.

Design Assistance

CAD drawings, BIM models, performance data sheets - we provide them all for free. Just go online.

Software

Find web applications on our website that make product identification and design calculation a breeze.

Distributor Support

Our distributors enjoy the very best marketing support. From point of sale solutions to digital content.

The UK's No Equal Construction Connector Solution

Building designers the world over specify Simpson Strong-Tie 'or equal'. However, there is no equal when it comes to structural connectors. We only offer 'premium' and that goes for every aspect of what we design, test and manufacture. And it goes to the heart of how we deal with everyone who comes into contact with our products, services and people.

Our mission is to help people design and build stronger, safer structures. Would you compromise? We won't.

Alphabetical Product Index

A

- **1ARBGAL** Arris Rail Bracket . . . 222
- **A** Angles . . . 154
- **A34E/A35E** Framing Anchors . . . 152
- **AB255** Structural Angle Bracket . . . 160
- **ABR** Reinforced Angle Bracket . . . 156
- **ABR255** Structural Angle Bracket . . . 158
- **ABW** Adjustable Post Base with Stand Off . . . 178
- **AE** Reinforced Angle Bracket . . . 156
- **AKR** Reinforced Angle Bracket for Timber Frames . . . 162
- **APB** Adjustable Elevated Post Base . . . 177
- **ATFN** Concealed Beam Hanger . . . 92
- **AT-HP** High Performance Resin . . . 224

B

- **BAN** Fixing Band . . . 195
- **BTALU** Concealed Beam Hanger . . . 89
- **BTC** Concealed Beam Hanger . . . 90
- **BTS** Brick to Timber Tie . . . 204

C

- **C2K** Crocodile Wall Extension Profile . . . 198
- **CBH** Concealed Beam Hanger . . . 88
- **CBQ** Post Base . . . 181
- **CBR** Masonry Reinforcement Mesh . . . 218
- **CCQ** Column Cap . . . 183
- **CH** Channel & Tie System . . . 199
- **CNA** Annular Ring Shank Nail . . . 27
- **CPT** Concealed Post Base . . . 176
- **CSA** Structural Timber Screw . . . 26

D

- **DML** Expanded Metal Lathing . . . 216
- **DSTC** Double Sided, Toothed Connector . . . 173
- **DT** Resin Dispensing Tool . . . 230
- **DTC** Slotted Truss/Joist Clip . . . 126

E

- **E** Reinforced Angle Bracket . . . 156
- **EA** Light Reinforced Angle Bracket . . . 163
- **EBC** Angle Bracket for Cladding . . . 166
- **EC** Light Duty Angle Bracket . . . 163
- **ECA** Flat Plate Bracket . . . 164
- **ECP** Flat Corner Bracket . . . 164
- **EFIXR** Adjustable Angle Bracket . . . 165
- **END** Multi Angle Bracket . . . 161
- **EPC** End Post Cap . . . 182
- **ERS** External Render Stop Bead . . . 209
- **ES** Nail Plate Angle Bracket . . . 165
- **ESCR** Washer Head Structural Timber Screw . . . 31
- **ESCRC** Countersunk Structural Timber Screw . . . 32
- **ESCRFTC** Fully Threaded Structural Timber Screw . . . 33
- **ET** Skewed 45° Hanger . . . 84
- **ETB** Concealed Beam Hanger . . . 93
- **ETFSS** Hold Down Strap . . . 146
- **EWH** Engineered Wood Hanger . . . 94

F

- **FB** Fixing Band . . . 195
- **FMS** Folded Mini Strap . . . 192
- **FT-DB** Frame Debonding Tie . . . 206

G

- **GPC** Gable Panel Connector . . . 134
- **GS** Glide Shoe . . . 127

H

- **H/L** Heavy/Light Restraint Straps . . . 188
- **H2.5A** High Wind Tie . . . 168
- **HB** Top Flange Engineered Joist Hanger . . . 119
- **HES** Heavy Engineered Restraint Strap . . . 186
- **HGUQ** Heavy Engineered Truss Timber Hanger . . . 131
- **HGUS** Heavy Engineered Timber Hanger . . . 125
- **HGUS** Heavy Engineered Truss Timber Hanger . . . 130
- **HI** Scrolled Hip Iron . . . 221
- **HITB** Backer Free, Top Flange I-Joist Hanger . . . 107
- **HIUB** Metal Web Joist Hangers . . . 115
- **HIUQ** Engineered Joist to SIP Panel Hanger . . . 110
- **HJHM/HJHMI** Masonry Hangers . . . 63
- **HMBTS** High Movement Timber Frame Tie . . . 205
- **HRC** Hip Ridge Connector . . . 143
- **HSA** Herringbone Strut . . . 193
- **HTT** Hold Down . . . 151

I

- **IC** Insulation Clip . . . 147
- **ICF** Insulated Concrete Form Ledger System . . . 73
- **IHS** I-Joist Hole Support . . . 122
- **ITBS** Backer Free, I-Joist Hanger with Adjustable Skew . . . 112
- **IUBS** Backer Free, Metal Web Joist Hanger with Adjustable Skew . . . 117
- **IUC** Concealed Flange Face Fix Hanger . . . 76

J

- **JES** Joist End Support . . . 136
- **JHA** Joist Hanger with Adjustable Height Strap . . . 74
- **JHM/JHMI** Joist Hanger for Masonry . . . 58

Value Engineered
This icon indicates a product that is preferable to similar connectors because of (a) easier installation, (b) higher loads, (c) lower installed cost, or a combination of these features.

In addition to the products listed in this catalogue, we have additional products on our website, strongtie.co.uk.

C-C-UK-2023 ©2023 SIMPSON STRONG-TIE COMPANY INC.

Alphabetical Product Index

L

L Flat "L" Shaped Bracket . . . 171
LES Light Engineered Restraint Strap . . . 186
LMAS Threaded Rod . . . 229
LS Skewable Angle . . . 172
LSSU/LSU Light Slope & Skew Adjustable Hangers . . . 140
LSTA Strap Tie . . . 194
LTS Twisted Strap Ties . . . 196

M

MHA Mini Hanger . . . 82
MJC Multiple Joist Connector . . . 124
MMB Mini Mesh Bead . . . 212
MP Mending Plate . . . 223
MTS Twisted Strap Ties . . . 197
MVB Movement Bead . . . 210

N

N3.75 Square Twist Nail . . . 27
NP Nail Plate . . . 133
NS Nail Stopper . . . 223
NSS Stainless Steel Nail . . . 26

P

PAAB PVCu Arch Angle Bead . . . 214
PAB PVCu Thin Coat Angle Bead . . . 214
PBC PVCu Render Stop Bead . . . 214
PBH Heavy Duty Elevated Post Base . . . 179
PBP Post Base . . . 174
PBS Post Base with Stand Off . . . 178
PBWS ZPRO Folded Post Base . . . 175
PC Post Cap . . . 182
PEB Plasterboard Edge Bead . . . 210
PISBMAXI Post Base with Stand Off . . . 180
PMB PVCu Movement Bead . . . 215
PMM PVCu Mini Mesh Angle Bead . . . 214
POLY-GP General Purpose Resin . . . 226
PPA Elevated Post Base with 100mm Stand Off . . . 181
PPRC Adjustable Post Base . . . 177
PPSB PVCu Plaster Stop Bead . . . 215
PSAB PVCu Standard Angle Bead . . . 215
PSB Plaster Stop Bead . . . 209
PWR Partition Wall Restraint . . . 169
PWT Party Wall Tie . . . 150

R

RBL Rib Lath . . . 217
RHMSK Skewed Masonry Hanger . . . 68
RR Ridge Rafter Connector . . . 138

S

SAB Angle Bead . . . 211
SAE/SAI Face Fix Hangers . . . 78
SDE Width Adjustable Face Fix Hanger . . . 85
SDW Structural Timber Screw . . . 30
SES Simpson End Seal . . . 70
SFH/SFHI/SFWH/SFWHI Safety Fast Masonry Restraint Hangers . . . 48
SFLH/SFLHI Safety Fast Lite Hanger . . . 44
SML/H Security Mesh . . . 218
SPA Sole Plate Anchor . . . 145
SPF Purlin Anchor . . . 170
SPR Timber Joist Hanger Slope Adjustable . . . 138
SPWG Square Plate Washer . . . 223
SPWT Party Wall Tie . . . 150
SSH 6.0mm Hexagon Head Connector Screw Impreg®+ . . . 35
SSH Hexagon Head Connector Screw Impreg®+ . . . 34
SSTC Single Sided, Toothed Connector . . . 173
STC Slotted Truss/Joist Clip . . . 126
STUC Paper Backed Wired Mesh . . . 219
SVM Stainless Steel Soffit Vent Mesh . . . 221
SWT Brick to SIP Tie . . . 204

T

T Flat "T" Shaped Bracket . . . 171
TCB Internal Thin Coat Angle Bead . . . 211
TCHI Top Chord Hung I-Joist Hanger . . . 105
TCP Truss Clip . . . 126
TFLS Levelling System . . . 144
TFPC Timber Frame Panel Closer . . . 148
THA Truss Hanger with Adjustable Height Strap . . . 129
THGQ Heavy Duty Girder Truss Hanger . . . 132
THM Mono Truss Hanger . . . 128
TJC Adjustable Skewed Bracket . . . 167
TU Concealed Beam Hanger . . . 86

V

VHJHM Very Heavy Masonry Hanger . . . 69
VP Loft Vent Plate . . . 137
VPA Variable Pitch Connector . . . 139
VTCR Valley Truss Clip . . . 142

W

WBT Window Board Tie . . . 222
WST Stainless Steel Wall Starter Tie . . . 200
WSTC Stainless Steel Cavity Wall Tie . . . 206
WTS Wire Wall Tie . . . 203

Z

ZS Slotted Z-Clip . . . 121

See the Product Nomenclature Guide at strongtie.co.uk for a description of product acronyms.

C-C-UK-2023 ©2023 SIMPSON STRONG-TIE COMPANY INC.

Subject Index

General Information

About Simpson Strong-Tie® . . . 8
Contents . . . 9
New Products . . . 10-11
Guide to Icons - Fasteners . . . 12
Load Table Explanation . . . 13
Important Information . . . 14-15
Corrosion Information . . . 16-17
Coating Information . . . 18-19
General Notes . . . 20-24
Fastening Identification . . . 25

Nails & Screws

CSA Structural Timber Screw . . . 26
NSS Stainless Steel Nail . . . 26
CNA Annular Ring Shank Nail . . . 27
N3.75 Square Twist Nail . . . 27

Structural Screws for Multi-Ply Timber

SDW Structural Timber Screw . . . 30
ESCR Washer Head Structural Timber Screw . . . 31
ESCRC Countersunk Structural Timber Screw . . . 32
ESCRFTC Fully Threaded Structural Timber Screw . . . 33
SSH Hexagon Head Connector Screw Impreg®+ . . . 34
SSH 6.0mm Hexagon Head Connector Screw Impreg®+ . . . 35

Masonry Hangers

SFLH/SFLHI Safety Fast Lite Hanger . . . 44
SFH/SFHI/SFWH/SFWHI Safety Fast Masonry Restraint Hangers . . . 48
JHM/JHMI Joist Hanger for Masonry . . . 58
HJHM/HJHMI Masonry Hangers . . . 63
RHMSK Skewed Masonry Hanger . . . 68
VHJHM Very Heavy Masonry Hanger . . . 69
SES Simpson End Seal . . . 70
ICF Insulated Concrete Form Ledger System . . . 73

Timber Hangers for Solid Joists

JHA Joist Hanger with Adjustable Height Strap . . . 74
IUC Concealed Flange Face Fix Hanger . . . 76
SAE/SAI Face Fix Hangers . . . 78
MHA Mini Hanger . . . 82
ET Skewed 45° Hanger . . . 84
SDE Width Adjustable Face Fix Hanger . . . 85

Connectors for Glulam Timber

TU Concealed Beam Hanger . . . 86
CBH Concealed Beam Hanger . . . 88
BTALU Concealed Beam Hanger . . . 89
BTC Concealed Beam Hanger . . . 90
ATFN Concealed Beam Hanger . . . 92
ETB Concealed Beam Hanger . . . 93

Engineered Wood Connectors

EWH Engineered Wood Hanger . . . 94
TCHI Top Chord Hung I-Joist Hanger . . . 105
HITB Backer Free, Top Flange I-Joist Hanger . . . 107
HIUQ Engineered Joist to SIP Panel Hanger . . . 110
ITBS Backer Free, I-Joist Hanger with Adjustable Skew . . . 112
HIUB Metal Web Joist Hangers . . . 115
IUBS Backer Free, Metal Web Joist Hanger with Adjustable Skew . . . 117
HB Top Flange Engineered Joist Hanger . . . 119
ZS Slotted Z-Clip . . . 121
IHS I-Joist Hole Support . . . 122
MJC Multiple Joist Connector . . . 124
HGUS Heavy Engineered Timber Hanger . . . 125

Roof Connectors

TCP Truss Clip . . . 126
DTC/STC Slotted Truss/Joist Clips . . . 126
GS Glide Shoe . . . 127
THM Mono Truss Hanger . . . 128
THA Truss Hanger with Adjustable Height Strap . . . 129
HGUS Heavy Engineered Truss Timber Hanger . . . 130
HGUQ Heavy Engineered Truss Timber Hanger . . . 131
THGQ Heavy Duty Girder Truss Hanger . . . 132
NP Nail Plate . . . 133
GPC Gable Panel Connector . . . 134
JES Joist End Support . . . 136
VP Loft Vent Plate . . . 137
RR Ridge Rafter Connector . . . 138
SPR Timber Joist Hanger Slope Adjustable . . . 138
VPA Variable Pitch Connector . . . 139
LSSU/LSU Light Slope & Skew Adjustable Hangers . . . 140
VTCR Valley Truss Clip . . . 142
HRC Hip Ridge Connector . . . 143

Timber Frame Connectors

TFLS Levelling System . . . 144
SPA Sole Plate Anchor . . . 145
ETFSS Hold Down Strap . . . 146
IC Insulation Clip . . . 147
TFPC Timber Frame Panel Closer . . . 148
PWT/SPWT Party Wall Tie . . . 150
HTT Hold Down . . . 151

Angle Brackets & Ties

A34E/A35E Framing Anchors . . . 152
A Angles . . . 154
ABR/AE/E Reinforced Angle Brackets . . . 156
ABR255 Structural Angle Bracket . . . 158
AB255 Structural Angle Bracket . . . 160
END Multi Angle Bracket . . . 161
AKR Reinforced Angle Bracket for Timber Frames . . . 162

C-C-UK-2023 ©2023 SIMPSON STRONG-TIE COMPANY INC.

Subject Index

EA Light Reinforced Angle Bracket 163
EC Light Duty Angle Bracket 163
ECA Flat Plate Bracket 164
ECP Flat Corner Bracket 164
EFIXR Adjustable Angle Bracket 165
ES Nail Plate Angle Bracket 165
EBC Angle Bracket for Cladding 166
TJC Adjustable Skewed Bracket 167

Timber Connectors

H2.5A High Wind Tie 168
PWR Partition Wall Restraint 169
SPF Purlin Anchor 170
T Flat "T" Shaped Bracket 171
L Flat "L" Shaped Bracket 171
LS Skewable Angle 172
DSTC/SSTC Double & Single Sided, Toothed Connectors . . . 173

Post Bases & Column Caps

PBP Post Base 174
PBWS ZPRO Folded Post Base 175
CPT Concealed Post Base 176
PPRC Adjustable Post Base 177
APB Adjustable Elevated Post Base 177
ABW Adjustable Post Base with Stand Off 178
PBS Post Base with Stand Off 178
PBH Heavy Duty Elevated Post Base 179
PISBMAXI Post Base with Stand Off 180
PPA Elevated Post Base with 100mm Stand Off 181
CBQ Post Base 181
PC/EPC Post Cap & End Post Cap 182
CCQ Column Cap 183

Restraint Straps

HES Heavy Engineered Restraint Strap 186
LES Light Engineered Restraint Strap 186
H/L Heavy/Light Restraint Straps 188
FMS Folded Mini Strap 192
HSA Herringbone Strut 193
LSTA Strap Tie 194
FB Fixing Band 195
BAN Fixing Band 195
LTS Twisted Strap Ties 196
MTS Twisted Strap Ties 197

Masonry Connectors & Wall Ties

C2K Crocodile Wall Extension Profile 198
CH Channel & Tie System 199
WST Stainless Steel Wall Starter Tie 200
WTS Wire Wall Tie 203
BTS/SWT Brick to Timber & Brick to SIP Tie 204
HMBTS High Movement Timber Frame Tie 205
WSTC Stainless Steel Cavity Wall Tie 206
FT-DB Frame Debonding Tie 206

Bead & Mesh

PSB Plaster Stop Bead 209
ERS External Render Stop Bead 209
PEB Plasterboard Edge Bead 210
MVB Movement Bead 210
SAB Angle Bead 211
TCB Internal Thin Coat Angle Bead 211
MMB Mini Mesh Bead 212
PAB PVCu Thin Coat Angle Bead 214
PAAB PVCu Arch Angle Bead 214
PMM PVCu Mini Mesh Angle Bead 214
PBC PVCu Render Stop Bead 214
PSAB PVCu Standard Angle Bead 215
PPSB PVCu Plaster Stop Bead 215
PMB PVCu Movement Bead 215
DML Expanded Metal Lathing 216
RBL Rib Lath 217
CBR Masonry Reinforcement Mesh 218
SML/H Security Mesh 218
STUC Paper Backed Wired Mesh 219

Miscellaneous

HI Scrolled Hip Iron 221
SVM Stainless Steel Soffit Vent Mesh 221
WBT Window Board Tie 222
1ARBGAL Arris Rail Bracket 222
SPWG Square Plate Washer 223
MP Mending Plate 223
NS Nail Stopper 223

Anchor Systems

AT-HP High Performance Resin 224
POLY-GP General Purpose Resin 226
LMAS Threaded Rod 229
DT Resin Dispensing Tool 230

C-C-UK-2023 ©2023 SIMPSON STRONG-TIE COMPANY INC.

About Simpson Strong-Tie®

We provide solutions that help people design and build safer, stronger structures.

At Simpson Strong-Tie® we know that not all building design challenges can be overcome with off-the-shelf connectors. We continually work with house builders and designers to develop solutions to meet their ever-changing needs.

In addition to ongoing range development, our engineering and production teams can also help with those 'one-off' solutions, manufacturing them on demand. Whatever you need, we aim to be the most trusted source of construction solutions on construction sites worldwide.

Our locations

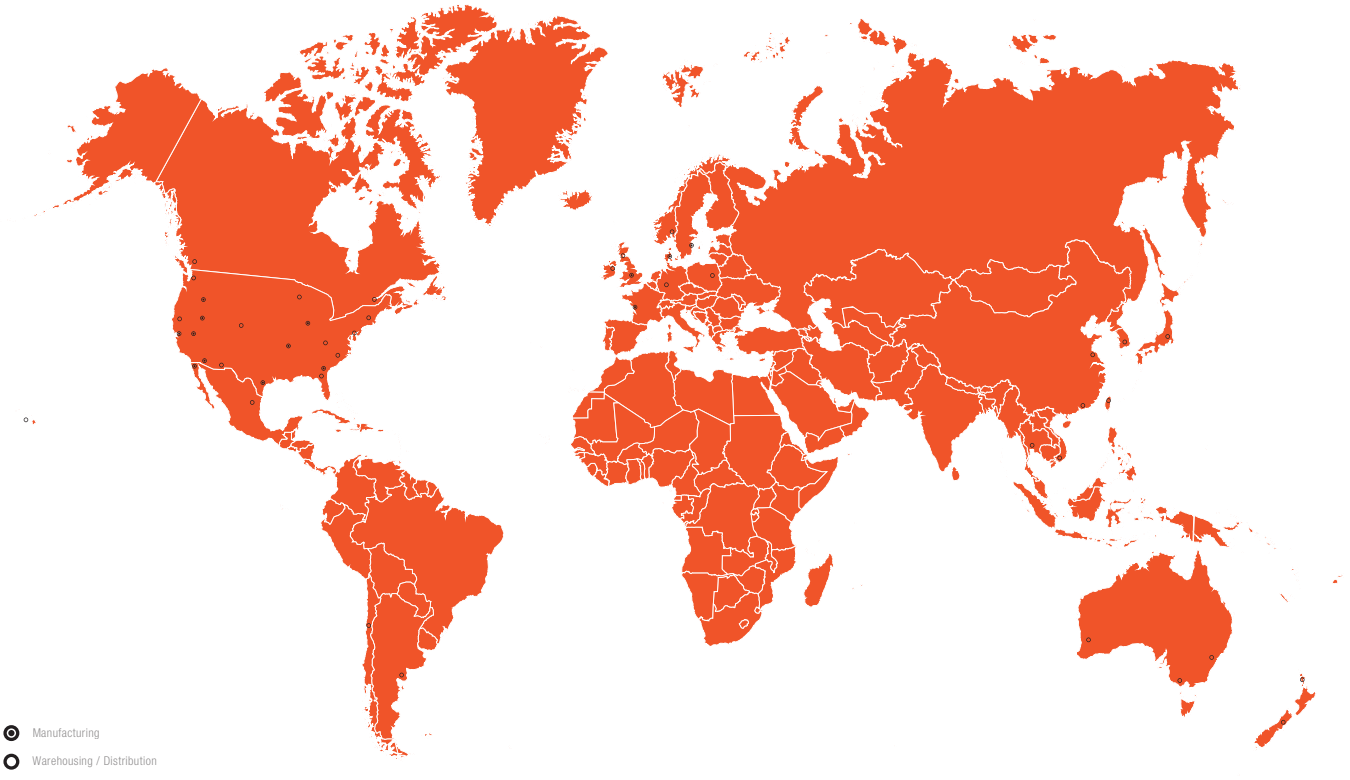

Contents

You specify, we manufacture.

We operate a rapid and comprehensive design and manufacture service for 'one-off' connectors, sometimes with characteristic performance values comparable with our fully tested ranges.

The ≠ connector range.

To us, structural connectors are more than just products, we see each one as representing a specific solution.

Designed and tested to perform in the most effective way possible, we consider every aspect of their use. Ease of installation, performance characteristics and life-span are the fundamental principles that make up our design DNA.

From the foundations up, we have every 'No Equal' solution you need to build safer, stronger structures.

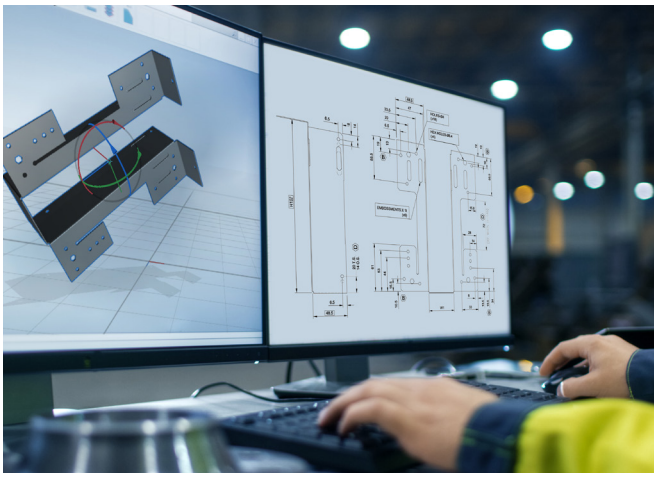

Getting Fast Technical Support.

When you call for engineering technical support, having the following information on hand will help us to serve you promptly and efficiently:

Which Simpson Strong-Tie catalogue are you using? (see cover for reference number)

Which Simpson Strong-Tie product are you using?

What are the carried and supporting member's material and application?

What is the carried member's width and height?

What is the supporting member's width and height?

What is your load requirement?

General Information	8-25	1
Nails & Screws	26-27	2
Structural Screws for Multi-Ply Timber	28-43	3
Masonry Hangers	44-73	4
Timber Hangers for Solid Joists	74-85	5
Connectors for Glulam Timber	86-93	6
Engineered Wood Connectors	94-125	7
Roof Connectors	126-143	8
Timber Frame Connectors	144-151	9
Angle Brackets & Ties	152-167	10
Timber Connectors	168-173	11
Post Bases & Column Caps	174-185	12
Restraint Straps	186-197	13
Masonry Connectors & Wall Ties	198-207	14
Bead & Mesh	208-220	15
Miscellaneous	221-223	16
Anchor Systems	224-230	17

New Products

BAN Fixing Band

BAN metal strapping can be used in numerous applications, but is often used to reinforce butt joints in timber panel construction, such as CLT.

Restraint Straps Page 195

BTC Concealed Beam Hanger

A completely concealed solution for supporting timber members onto concrete or steel. Optional slopes up to 45° available.

Connectors for Glulam Timber Page 90

DTC/STC Truss Clip

DTC truss clip is used to provide alignment control between a roof truss and non-bearing walls. The 38mm slot permits vertical truss chord movement when loads are applied.

Roof Connectors Page 126

ECA and ECP Light Duty Brackets

Light angle brackets are used in a large number of DIY applications and for reinforcing furniture assemblies.

Angle Brackets & Ties Page 164

EWH Engineered Wood Hanger

Universal, flexible and simple to install, the EWH hanger has been designed to fulfil a wide variety of joist to joist/panel configurations including I-Joists, metal web joists and solid timber joists onto headers of I-Joists, metal web joists, solid timber joists and SIP.

Engineered Wood Connectors Page 94

HTT Hold Down

Ideal for existing or new construction, HTT Tension ties provide a high strength timber to concrete, or timber to masonry, tension connection.

Timber Frame Connectors Page 151

C-C-UK-2023 ©2023 SIMPSON STRONG-TIE COMPANY INC.

New Products

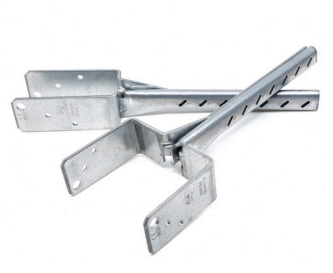

PBWS Engineered Post Base

PBWS is single-piece, non-welded post base for connecting timber to concrete. PBWS is coated with ZPRO for a longer life span.

Post Bases & Column Caps Page 175

SPWT Party Wall Tie

SPWT is a stepped party wall tie which can be used where adjoining timber frame buildings are constructed on sloping ground. Conforms to Part E of the building regulations.

Timber Frame Connectors Page 150

SSH Structural Connector Screw

For installing connectors where high load capability is required. The superior Impreg®+ coating makes the screw suitable for exterior use.

Structural Screws Page 34

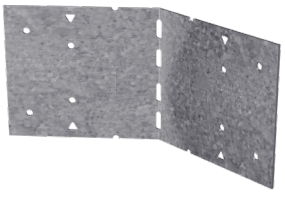

TJC Adjustable Skewed Bracket

TJC is an an on site, adjustable bracket and can be used to connect together two separate panels at varying angles.

Angle Brackets & Ties Page 167

Products to be discontinued in 2022/2023

Simpson Strong-Tie® is dedicated to continuously expanding our line of structural connectors with innovative new products that address the changing needs of our customers. As new connectors are introduced that improve upon older designs, it becomes necessary to discontinue the old versions in the name of efficiency and product-line simplicity.

Discontinued	Replacement
ESCRHRD	-
ESCRFTZ	-
ITB	EWH
ITSE	EWH
IUQ	EWH
IUSE	EWH
LIB	EWH
LITB	EWH
SFJC	-
BST	-
DBST	-
CWT	-
LWTS	-
FTC	-
HELI	-
HELIST	-

C-C-UK-2023 ©2023 SIMPSON STRONG-TIE COMPANY INC.

Guide to Icons - Fasteners

Head Styles

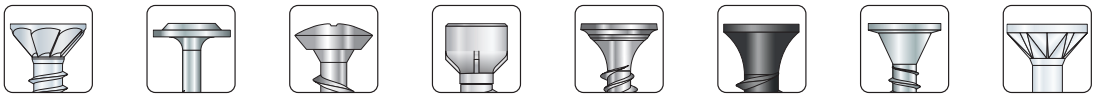

Ribbed Flat Head | Washer Head | Wafer Head | Cap-Style Head with Nibs | Bugle Head | Reduced Bugle Head | Extended Bugle Head | Flat Head with Facet

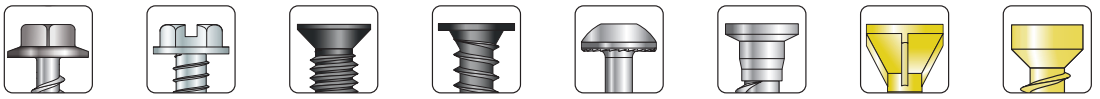

Hex-Washer Head | Hex-Washer Head | Countersunk Head | Reduced Flat Head | Pan Head | Minimal Flat Head | Countersunk with Ribs | Trim Pan Head

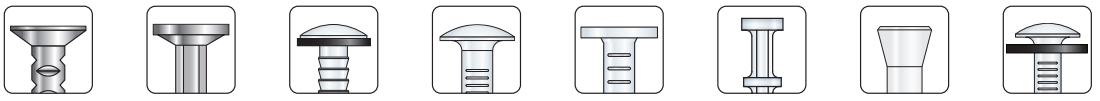

Trim Head | Flat Head | Low Oval Head with Washer | Oval Head | Flat Head | Double Head | Countersunk Head | Oval Head with Washer

Thread Styles

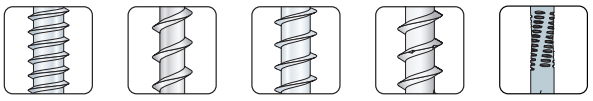

Metal Tapping Threads | Coarse Threads | Coarse Serrated Threads | Coarse Milling Threads | STN Thread

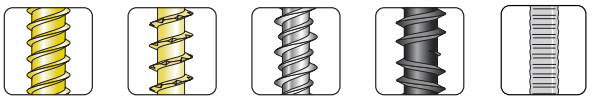

Twin Threads | Serrated Milling Threads | High-Low Threads | Twin Threads with Reverse Thread | Annular Ring Thread

Point Styles

Drill Point with Wings | Type 17 Point | Drill Point | Pilot Point | STN point

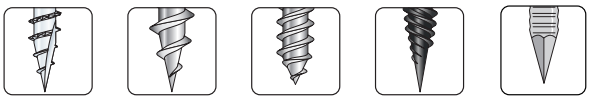

Type 17 Point with Milling Thread | Sharp Point | Standard Point | Sharp Point | CNA point

Materials and Substrates

Steel | Concrete / Stone | Pressure Treated Timber

Wood / Wood Board | Chipboard Sheets | Plasterboard

Light Concrete | Cement Plate | Tile / Airbrick | Paperboard

How To Use This Catalogue

- New Products
  New products are shown with the NEW symbol. There are also many new sizes within existing model series.

Extra Corrosion Protection

The teal arrow icon identifies products that are available with additional corrosion protection (ZMAX®, hot-dip galvanized or double-barrier coating).

SS

The SS teal arrow icon identifies products manufactured from stainless steel.

Other products may also be available with additional protection; contact Simpson Strong-Tie for options. Stainless products may need to be manufactured upon ordering. See page 16 for information on corrosion, and visit our website strongtie.co.uk/info for more technical information on this topic.

C-C-UK-2023 ©2023 SIMPSON STRONG-TIE COMPANY INC.

Load Table Explanation

References.: This is the Simpson Strong-Tie product name.

Title: Reference to the dimensions and performance values.

Holes: This shows the hole quantities (and size) present in the connector.

Fasteners: This shows the fastener quantities (and type) required to achieve the loads.

Characteristic Loads: The maximum load that a hanger is designed to provide. There may be multiple design loads acting in different directions (up, down, lateral etc) imposed onto a connector – see the force compass for further explanation.

Product Dimensions & Performance Values

References	Dimensions [mm]				Holes		Fasteners		Characteristic Values [kN]	Safe Working Loads [kN]	
					Flange A	Flange B	Flange A	Flange B			
	A	B	C	t	Ø4.1	Ø4.1	N3.75x30	N3.75x30	$R_{1,k}$	$R_{1,SWL}$ (Long Term)	$R_{1,SWL}$ (Medium Term)
LS30	85	55	55	1.0	3	3	3	3	2.80	1.29	1.60
LS50	124	55	55	1.0	4	4	4	4	4.30	1.73	2.16
LS70	162	55	55	1.0	5	5	5	5	4.40	2.16	2.58

SWL: The maximum load that a hanger is designed to provide, with a safety factor applied to them – please refer to page 14- design method for more information.

Fastener Information: Fastener specification and quantity.

Dimensions A, B, C, t: this shows the product dimensions (referenced in the product drawing).

The Force Compass
The Force Compass is shown next to all relevant products, to highlight the direction of the forces that act upon that connector.
The capacities are shown as R, where (R) is the Resistance against the Force (F) that can be achieved by the connector. Eg – $R_{1,k} = F_1$
The force directions on the compass will remain consistent, and the forces which are relevant to a particular connector will be highlighted, and circled in RED.
E.g A connector that has both a Download (R_1) and Uplift (R_2) capacity, will be displayed as shown.
Force Arrow to indicate direction of applied load and resistance offered by connector.

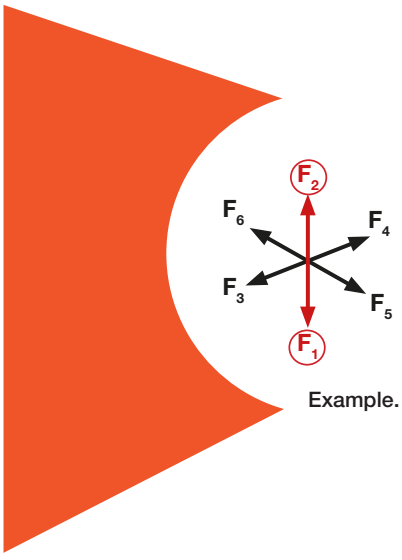

Example.

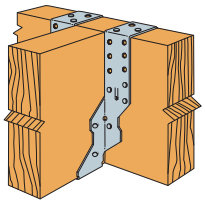

Product Drawing:
Provides a graphic presentation of the product with dimensional information (often cross-referenced to the table).

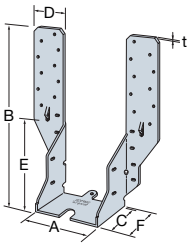

Anchor References

Solid Masonry: This anchor is suitable and approved for use in solid masonry.

Hollow Masonry: This anchor is suitable and approved for use in hollow masonry.

Compression Zone: This anchor is suitable and approved for use in non-cracked (compression zone) concrete.

C-C-UK-2023 ©2023 SIMPSON STRONG-TIE COMPANY INC.

Eurocode 5: Design Method

Design Methods

The Eurocodes which impact on the Simpson Strong-Tie range of products are:

EN1993 Eurocode 3 Design of Steel Structures

EN1995 Eurocode 5 Design of Timber Structures

EN1996 Eurocode 6 Design of Masonry Structures

Eurocode 5 introduces limit state design principles to structural timber design in the UK for the first time. This requires the designer to use characteristic values for the product capacities.

The characteristic capacities (or resistances) are modified by partial safety factors to arrive at design capacities. These factors generally increase the loads and decrease the capacity.

In timber design the duration of loading also influences the design capacity and a modification factor is applied dependent on the duration. These modification factors are also dependent on the materials being used.

The Simpson Strong-Tie products are generally connected to either Solid Timbers or LVL materials, which utilise the modification factors k_{mod} shown in the table below.

Extract From Table 3.1 in BS EN 1995-1-1:2004 + A2:2014 (Eurocode 5)

Load Duration	Permanent	Long Term (Download)	Medium Term	Short Term (Uplift)	Instantaneous
k_{mod}	0.6	0.7	0.8	0.9	1.1

This catalogue generally presents characteristic resistances for timber to timber connectors as Unmodified Characteristic Resistances i.e. the characteristic value has not been modifed by the appropriate k_{mod} factor.

Please note the k_{mod} factor does not apply to masonry hangers and connectors.

Actual Applied Loads x Partial Safety Factor on Loads = Design Load

(or Factored Load)

Characteristic Capacity x k_{mod} / Partial Safety Factor on Materials = Design Capacity

Design Load < Design Capacity

NOTE: It is important Characteristic or Design Capacities are not compared with Actual Applied Loads when selecting and designing a connector. Design Capacities (i.e. Characteristic Capacities factored as described above), shall only be used to check against factored design loads.

The Allowable Load design method utilises a Global Safety Factor to reduce the Ultimate or Failure Load to a Safe Working Load, this must be greater than the Actual Applied Load.

The two methods can be compared graphically using the diagram below:

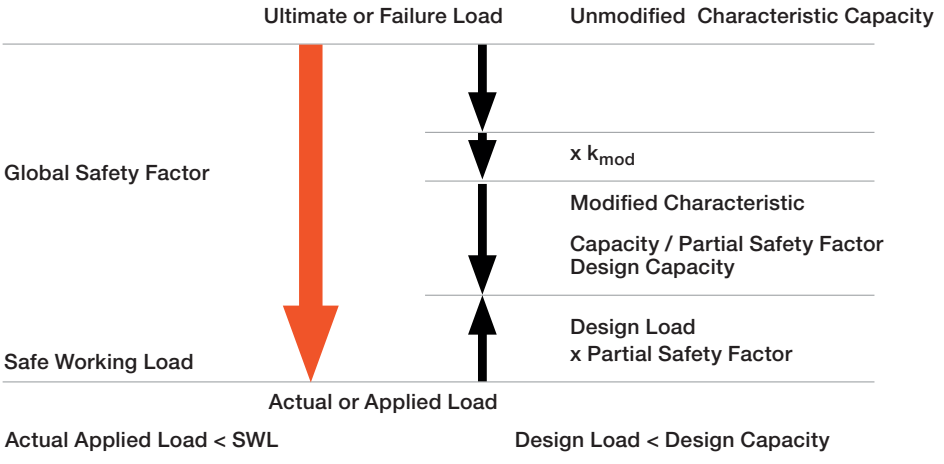

C-C-UK-2023 ©2023 SIMPSON STRONG-TIE COMPANY INC.

Construction Product Regulations

UKCA, UKNI and CE Marking

From 01/01/2023, where applicable, construction products put on the UK market will need to conform to the new UK based approval system, which is known as the UKCA Mark. Until this date, the UK will continue to recognise the existing EU CE Marking approvals.

Essentially, the new UKCA approval system will be similar in principal to the existing EU CE Marking approval system in that the route to UKCA marking will be through designated standards and UK Technical Approvals.

All existing European harmonised standards (hEN's) will become UK designated standards and existing European Assessment Documents (EAD's) will become UK Assessment Documents (UKAD's). This means that immediately after the end of the transition period, harmonised European standards and UK designated standards will be identical.

Northern Ireland will continue to align with all relevant EU rules relating to the placing on the market of manufactured goods. So CE Marking will still be the recognised conformity marking. However, there will be a new conformity marking for products placed on the market in Northern Ireland which have undergone mandatory third-party conformity assessment by a body based in the UK. This will be the UKNI Marking.

During 2022, Simpson Strong-Tie® will be moving existing CE Marked products over to UKCA or where applicable UKNI Marking.

UKCA, UKNI and CE Declarations of Performance's (DoP's) will be available to download from our website: www.strongtie.co.uk.

Product packaging labels will be updated to show the UKCA or UKNI Marking. In some instances where products are dual approved (CE for the EU mainland and UKCA for the UK) then labels will show both the UKCA Marking and CE Marking information.

Our packaging is labelled in accordance with CPR, an example of which can be seen below.

1. Simpson Strong-Tie® item code
2. Item description
3. EAN bar code (each)
4. EAN bar code (box)
5. UKCA symbol
6. The number of the notified body undertaking factory production control auditing (if applicable)
7. Year that Simpson Strong-Tie first UK CA marked the product
8. Information on intended use of product and its essential requirements
9. Name of manufacturer and web address
10. Date of manufacture
11. Box quantity and weight
12. Technical document number to which the product complies
13. Factory production control certificate number
14. Number of the technical standard to which the product complies
15. Declaration of Performance number (copy available from www.strongtie.co.uk or upon request).

C-C-UK-2023 ©2023 SIMPSON STRONG-TIE COMPANY INC.

Corrosion Information

Understanding the corrosion issue

Many environments and materials can cause corrosion, including ocean salt air, fire retardants, fumes, fertilizers, preservative-treated wood, de-icing salts, dissimilar metals and more. Metal connectors, fasteners and anchors could corrode and lose load-carrying capacity when installed in corrosive environments or when installed in contact with corrosive materials.

When corrosion is caused by airborne solutions (ocean air, swimming halls, spray from a salt-treated streets in winter, etc.) the metal parts can be in environments that are directly exposed to rain. They can be covered by a roof or inside the ventilated area of a facade.

The many variables present in a building environment make it impossible to accurately predict if, or when, corrosion will begin or reach a critical level. This relative uncertainty makes it crucial that specifiers and users are knowledgeable of the potential risks and select a product suitable for the intended use. It is also prudent that regular maintenance and periodic inspections are performed, especially for outdoor applications.

It is common to see some corrosion in outdoor applications. Even stainless steel can corrode. The presence of some kinds of corrosion, e.g. white rust on zinc, does not mean that load capacity has been affected or that failure is imminent. If significant corrosion, e.g. red rust, is apparent or suspected, then a qualified engineer or inspector should inspect the framing members, fasteners and connectors. Replacement or cleansing of affected components may be appropriate. Red rust corrosion of steels will mostly carry on increasing and will cause major damage at an advanced stage.

Due to the many different chemical treatment formulations, chemical retention levels, moisture conditions and regional formulation variants, selection of coatings has become a complex task. We have attempted to provide basic knowledge on the subject here, but it is important to fully educate yourself by reviewing information, literature and evaluation reports published by others.

It is important to select the fastener coating so that it fits with the connector coating to avoid to decreased performance of the connection. This document does not include information or guidance related to fire retardant timbers.

Galvanic Corrosion

Galvanic corrosion (also known as bimetallic corrosion, dissimilar metal corrosion or contact corrosion) may occur when dissimilar metals (e.g. galvanised mild steel and stainless steel) are in contact in a corrosive electrolyte (e.g. water containing salt, acid, etc.). When a galvanic couple forms, one of the metals in the couple becomes the anode and corrodes faster than it would all by itself, while the other becomes the cathode and corrodes slower than it would alone. For galvanic corrosion to occur, three conditions must be present:

1. Electrochemically dissimilar metals must be present.
2. These metals must be in electrical contact.
3. The metals must be exposed to an electrolyte.

The relative nobility of a material can be predicted by measuring its corrosion potential. The well-known galvanic series, (see right) lists the relative nobility of certain materials in seawater.

A small anode/cathode area ratio is highly undesirable. In this case, the galvanic current is concentrated onto a small anodic area. Rapid thickness loss of the dissolving anode tends to occur under these conditions. Adverse area ratios are likely to occur with fasteners at joints. Using Carbon Steel fasteners with Stainless Steel connectors should be avoided because the ratio of the area between the stainless steel to Carbon Steel is small and the fasteners will be subject to aggressive attack, thus greater corrosion. Conversely, the rate of attack of a Carbon Steel connector secured by a Stainless Steel fastener is much slower.

Corroded end (Anode)
Magnesium, Magnesium alloys and Zinc
Aluminium, Cadium, Iron and Steel
Lead, Tin, Nickel and Ni-Cr alloy
Brasses, Copper and Cu-Ni alloys
Nickel
Stainless Steels
Protected end (Cathode)

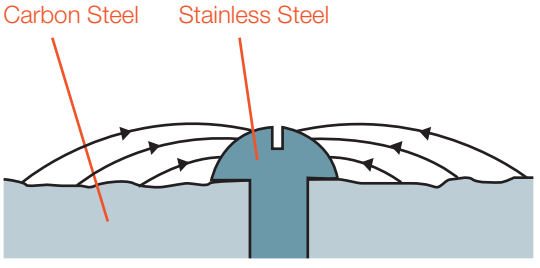

Large Anode (Carbon Steel) area, small Cathode (Stainless Steel fastener) area showing no attack on the fasteners and relatively insignificant attack of Carbon Steel.

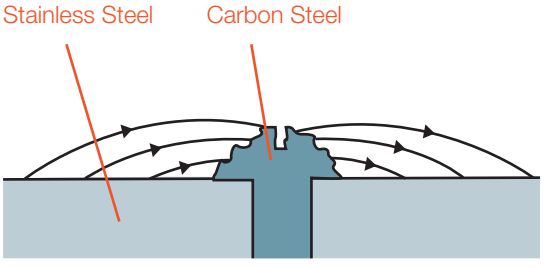

Large Cathode (Stainless Steel) area, small Anode (Carbon Steel fastener) area showing no attack on the Stainless Steel and relatively increased attack of the fastener.

C-C-UK-2023 ©2023 SIMPSON STRONG-TIE COMPANY INC.

Corrosion Information

Good to know: When low-alloy steels, in high moisture atmospheres, are in contact with even small carbon steel particles, bimetallic corrosion can cause a nucleus for a stainless steel corrosion. This may occur when stainless fasteners are processed with non-stainless tools.

Prevention of bimetallic corrosion is possible by excluding an electrolyte from the connection by painting or taping over the joint. Alternatively, the two metals should be isolated from each other by painting each contact surface or using a non-metallic isolation material; typically nylon, neoprene or Teflon washers, pads, gaskets or bushes depending upon the particular application.

The table below provides details of general materials that may be used together in certain instances, depending on area ratio as previously discussed.

It is difficult to give general statements on certain materials (e.g. aluminium), as the appearance of some ingredients in an alloy (e.g. copper) can have a major impact on the corrosion resistance in the presence of various electrolytes (e.g de-icing salts). In addition, post treatments (e.g. eloxation) can have an impact on the corrosion resistance. This is especially when low-alloy steels in high moisture atmospheres are in contact even with small carbon steel particles, bimetallic corrosion can cause a nucleus for a stainless steel corrosion. This might happen when stainless fasteners are processed with non-stainless tools.

Anode (Ratio < 10:1)

Cathode (Area Ratio > 10:1)	Cast Iron	Mild Steel	Stainless Steel	Copper	Phosphor Bronze	Aluminium Bronze	Magnesium Bronze	Aluminium	Zinc
Cast Iron									
Mild Steel									
Stainless Steel									
Copper									
Phosphor Bronze									
Aluminium Bronze									
Magnesium Bronze									
Aluminium									
Zinc									

Key :
- May be used in contact under all conditions
- May be used in contact in dry conditions
- MUST NOT be used in contact conditions

Service classes according to Eurocode 5: Definition of the service classes environment are given within the EN1995-1-1

Service Class	Description	Examples
1	Moisture content in the materials corresponding to a temperature of 20°C and the relative humidity of the surrounding air only exceeding 65% for a few weeks per year.	Warm roof, intermediate floors, timber frame walls - internal and party walls.
2	Moisture content in the materials corresponding to a temperature of 20°C and the relative humidity of the surrounding air only exceeding 85% for a few weeks per year.	Cold roof, ground floors, timber frame walls - external walls where member is protected from direct wetting.
3	Climatic conditions leading to higher moisture contents than in service class 2.	External uses - fully exposed.

C-C-UK-2023 ©2023 SIMPSON STRONG-TIE COMPANY INC.

Different Types of Coating

		For fasteners, different coatings are used depending on the intended use of the product.
INDOOR	BRIGHT	Bright: No coating is applied on the fasteners. It is only suitable for temporary fixing and very low corrosion application.
	LACQ	Lacquered: A thin layer of paint is applied on the fastener. It is only suitable for temporary fixing and very low corrosion application.
	PHOS	Phosphated: Products are dipped in a hot phosphoric acid and phosphates. Anti-corrosion oil is added after the treatment in order to improve the corrosion resistance. It is intended for dry, low corrosion applications.
	NCS	Non coated steel: No coating is applied on the fasteners. It is only suitable for temporary fixing and very low corrosion application.
	EG	Electrogalvanised: This coating system consists of a thin electroplated zinc base layer. It provides corrosion resistance that is adequate for low corrosion environments.
	YZP	Electroplated Zinc: This coating system consists of an electroplated zinc base layer with a top coat. It provides corrosion resistance that is adequate for medium corrosion environments.
	BLACK E-COAT	Black E-Coat: Electrocoat utilizes electrical currents to deposit the coating material onto the fastener. After application, the coating is oven cured. Electrocoat is intended for dry, low corrosion applications.
OUTDOOR	PROTEC®	Protec®: Products are dipped in liquid that consists of zinc and aluminium flakes, then hardened in ovens, after the spinning process. It is intended for a medium corrosion environment.
	PROTEC® +	Protec®+: Products are dipped in liquid that consists of zinc and aluminium flakes, harden in ovens after the spinning process. It is intended for a medium corrosion environment.
	HDG 50 µm	Hot Dip Galvanised: Products are dipped in melted zinc 550-560°c, chemical reaction between the steel and the zinc. It provides a good corrosion resistance in most environments.
	DB	Double Barrier: The Simpson Strong-Tie Double Barrier coating is a proprietary coating that provides a level of corrosion resistance that is equivalent to hot-dip galvanization in most non-marine environments.
	IMPREG® +	Impreg®+: Products are dipped in liquid that consists of zinc and nickel. It offers excellent corrosion performance and has a low risk of galvanic corrosion when used together with aluminum or stainless steel.
	IMPREG® X4	Impreg®X4: The Simpson Strong-Tie Impreg®X4 coating is a proprietary coating that provides a very good level of corrosion resistance. It can resist the aggressive chemicals in treated timber.
	A2	Non-Acid Proof Stainless Steel 304, 304L –A2 (1.4301, …): Type 304 stainless steel is a nickel-chromium austenitic grade of stainless steel. Types 304 stainless steel is not hardened by heat treatment and is inherently non-magnetic. It provides very good corrosion resistance and is suitable for use in many corrosive environments.
SEVERE	A4	Acid Proof Stainless Steel 316, 316L –A4 (1.4401, 1.4404 …): Type 316 stainless steel is a nickel-chromium austenitic grade of stainless steel with 2-3% Molybdenum. Type 316 stainless steel is not hardened by heat treatment and is inherently non-magnetic. It provides a level of corrosion protection suitable for severe environments.
	HCR	High Corrossion Resistance Stainless Steel HCR (1.4529, …): Type HCR stainless steel is adapted for severe environments that are not managed by Type 304 or 316 stainless steel, such as swimming pools.

Others	AL	Aluminium: Can withstand rain but shouldn't be used together with other metals where there is a risk of galvanic corrosion. Certain Aluminum alloys can be used outdoor together with stainless steel types, in the absence of chlorides.
	BRASS	Brass: Can withstand rain but shouldn't be used together with other metals where there is a risk of galvanic corrosion.
	CU	Copper: Can withstand rain but shouldn't be used together with other metals where there is a risk of galvanic corrosion.

C-C-UK-2023 ©2023 SIMPSON STRONG-TIE COMPANY INC.

Different Types of Coating

INDOOR	OUTDOOR	SEVERE
BRIGHT, LACQ, EG, BLACK E-COAT, NCS, PHOS, YZP	DB, HDG 50 µm, A2, PROTEC®, PROTEC® +, IMPREG® +, IMPREG® ×4	A4, HCR

C-C-UK-2023 ©2023 SIMPSON STRONG-TIE COMPANY INC.

Terms and Conditions

Product Use

Products in this catalogue are designed and manufactured for the specific purposes shown, and should not be used with other fixings not approved by a qualified designer. Modifications to products or changes in installation procedures should only be made by a qualified designer.

The performance of such modified products or altered installation procedures is the sole responsibility of the designer.

Indemnity

The Buyers shall indemnify Simpson Strong-Tie® against any claim or liability in respect of any infringement of a patent or registered design, copyright or other industrial property resulting from compliance with the Buyer's instructions, express or implied, and the Buyer undertakes further to indemnify Simpson Strong-Tie® for any loss, damage or expense in respect of any liability arising under or by reason of the provisions of the Consumer Protection Act 1987 in relation to the specification or design of such goods or any similar legislation in any other country in which the goods are supplied.

Non-Catalogue & Modified Products

Consult Simpson Strong-Tie® for applications requiring modified products, or for fixings for use in hostile environments, with excessive wood shrinkage, or with abnormal loading or erection requirements.

Non-catalogue products must be designed by the customer and will be fabricated by Simpson Strong-Tie® in accordance with customer specifications. Simpson Strong-Tie® cannot and does not make any representations regarding the suitability of use or load-carrying capacities of non-catalogue products.

Simpson Strong-Tie® provides no warranty, express or implied, on non-catalogue products. Any party modifying

Simpson Strong-Tie® products must provide the installer with specific instructions on the modified product's specifications, installation, and use.

Limited Warranty

a) The Seller warrants that it has good title to the goods and that the goods will, for a period of 12 months from the date of delivery comply with their specification and be free from defects in material and workmanship. The Seller does not warrant that the goods are fit for any particular purpose and it is the Buyer's responsibility to ensure the goods are suitable for the use(s) to which it intends to put them.

b) The warranties in condition (a) are given on condition that the Seller is not liable for a defect in the goods caused by:

(i) fair wear and tear, wilful damage, negligence, or abnormal or unsuitable storage or working conditions of the goods by the Buyer;

(ii) failure to follow the Seller's instructions or guidance whether oral or in writing (including but not limited to any instructions set out in the Seller's catalogue) as to the storage, commissioning, installation, use and maintenance of the goods or (if there are none) good trade practice regarding the same;

(iii) the Buyer altering or repairing the goods without the written consent of the Seller;

(iv) the Buyer making further use of the goods after giving notice in accordance with condition (c); or

(v) the goods differing from their specification as a result of changes made to ensure they comply with applicable statutory or regulatory requirements.

c) The Seller is not liable for a defect in the goods unless it is notified to the Seller within 5 days of the date of delivery or, if the defect would not be apparent on reasonable inspection, of the date on which it would become apparent to a reasonable buyer.

d) The Seller shall not be liable for damage in transit, shortage of delivery or non-delivery unless the Buyer shall have given the Seller written notice of such damage, shortage or loss, with reasonable particulars of it within 5 days of receipt of the goods or (in the case of total loss) of receipt of the invoice or other notification of dispatch.

e) If the Seller is liable under these warranties then (subject to condition (j)) the Seller's only obligation is, at its option, to make good any shortage or non-delivery; replace or repair any goods which are damaged or defective; or refund to the Buyer the amount paid by the Buyer for the goods that are the subject of the claim.

f) Except as expressly set out in these conditions, all conditions, warranties and representations, expressed or implied by statute, common law or otherwise, in relation to the goods are excluded.

g) The Seller is not liable to the Buyer, whether for negligence, breach of contract, misrepresentation or otherwise, for:

(i) loss or damage incurred by the Buyer as a result of third party claims; or

(ii) indirect or consequential damage suffered by the Buyer, including, without limitation, loss of goodwill, business opportunity or anticipated savings; or

(iii) economic losses including without limitation loss of profit.

h) For the avoidance of doubt, subject to condition (j) the entire liability of the Seller arising out of or in connection with the goods, whether for tort (including negligence), breach of contract, breach of statutory duty, misrepresentation or otherwise, is limited to the Seller's level of insurance cover in place from time to time (currently £500,000) and the Buyer shall be responsible for making its own arrangements for the insurance of any excess loss.

i) The Seller's prices are determined on the basis of the liability limits in this condition. The Buyer may, by written notice to the seller, request the Seller to agree a higher limit of liability provided insurance cover can be obtained for that higher limit.

j) Nothing in these conditions shall operate to exclude or restrict the Seller's liability for death or personal injury resulting from negligence, or breach of the obligations arising from section 12 of the Sale of Goods Act 1979, or for fraud/deceit.

C-C-UK-2023 ©2023 SIMPSON STRONG-TIE COMPANY INC.

Company Profile

Quality Policy

We help people build safer structures, economically. We do this by designing, engineering and manufacturing "No Equal" structural connectors, and other related products, that meet or exceed our customers' needs and expectations.

Everyone is responsible for product quality and is committed to ensuring the effectiveness of the Quality Management System. Simpson Strong-Tie® is an ISO 9001 registered company. ISO 9001 is an internationally recognised quality management system standard, which lets our customers know that they can count on the consistent quality of Simpson Strong-Tie's products and services.

FM 767499

Environmental Health and Safety Policy

Simpson Strong-Tie® continues to look for ways to build safer and stronger structures while being mindful of how we can help protect the environment and the health and safety of our employees. We are committed to environmental management, including health, safety and ecological protection. Simpson Strong-Tie® is accredited to the internationally recognised standards for environmental health & safety management systems.

EMS 517722

OHS 570006

Testing Laboratory Accreditation

The Andris Peterson European Test Laboratory, located in Tamworth, Staffordshire, is the first manufacturer's facility to achieve third party accreditation to the international standard BS EN ISO/IEC 17025.

The world-class facility now conducts around 10,000 product tests annually and has recently benefited from a significant investment, which will enable it to double productivity. The fact that we extensively test our connectors gives you the reassurance that they will perform in the toughest conditions. We strive to ensure that our products are compliant with the latest European requirements for construction products.

C-C-UK-2023 ©2023 SIMPSON STRONG-TIE COMPANY INC.

Disproportionate Collapse - Timber Frame Buildings

The Regulations

It is a requirement under the UK building regulations that buildings comply to a minimum level of robustness. This is referred to as 'disproportionate collapse'. The building regulations for Scotland and England & Wales in essence state, although worded slightly differently from each other, that: "The building shall be constructed so that in the event of an accident the building will not suffer collapse to an extent disproportionate to the cause".

Until a British code is available and referenced in the building regulations, the route for timber designers is to adopt alternative methods. The STA (Structural Timber Association) has developed a method and forms the basis for the following information.

The Methods

Platform timber frame is a lightweight building process that under accidental damage is known to be robust and has significant capacity to span over gaps caused by accidental damage. This was demonstrated by tests carried out on the BRE/TRADA TF2000 six storey building in 1998 which concluded that: "...timber frames designed and built correctly were robust against disproportionate collapse".

Platform timber frame comprises wall and floor components mechanically fixed to each other. Unlike other structural concepts, buildings falling outside the scope of platform cellular layouts e.g. post & beam or portal frames, platform timber frame relies on the full diaphragm action of the floors to transfer horizontal forces to an evenly distributed layout of load bearing walls, which provide both vertical support and horizontal load resistance.

The building regulations have classified buildings into 4 classes according to building type and risk.

Class	Building Type & Occupancy	Method	Design Check	Products
Class 1	Single occupancy - 1 to 4 storey e.g. Detached and town houses.	Platform:	No additional requirements above normal design process.	
		Other:	Horizontal tying[1] force at each junction to be checked.	
Class 2A	Houses or apartments - up to 4 storey	Platform:	Use common proven details to provide tying[1] of suspended floors to walls.	EWH, HITB, SAE, SAI, IUC
		Other:	Check for an accidental horizontal effective tying[1] force of 5 kN/m of supported wall.	
Class 2B	Houses, apartments or other residential buildings - 4 to 15 storey Hospitals - up to 3 storey Educational buildings - up to 15 storey	Platform:	Use common proven details to provide effective tying[1] of suspended floors to walls, along with a check on the notional removal of each load bearing wall (bridging)[2]. Key element[3] design to be used when notional removal is not practical.	SAE, SAI, IUC, CC, CCC, CCT, ECCLL
		Other:	Check for an accidental horizontal effective tie force of 7 kN/m of supported wall along with check on the notional removal of each load supporting, load bearing or wall (bridging)[2]. Key element[3] design to be used when notional removal is not practical.	
Class 3	Buildings with high levels of crowd accumulation	Designer to carry out risk assessment and decide upon a suitable method.		

1. Tying – Provision of effective horizontal ties.
2. Bridging – "Rim Beam" method where the structure is designed to bridge over the loss of an untied member.
3. Key Element – A structural member (column) upon which the stability of the remainder of the structure depends.

EWH, HITB, SAE, SAI, IUC tie the joist to rim beam, providing a vertical support & horizontal tie force.
SAE, SAI, CC, CCC, CCT, ECCLL join rim beam members at each junction, providing a vertical support & horizontal tie force.
CC, CCC, CCT, ECCLL join a structural column (Key Element) to the rim beam, providing a horizontal tie force.

C-C-UK-2023 ©2023 SIMPSON STRONG-TIE COMPANY INC.

Important Information

General Notes

This catalogue reflects changes in the product performance and configurations of some Simpson Strong-Tie® products. This catalogue is effective until 31st December 2022 and supersedes all information in earlier publications of products shown. Information on product performance and configurations are updated periodically. Contact Simpson Strong-Tie® for the most current product information. Product performances in the catalogue are for the described specific applications of properly installed products. Product modifications, improper loading or installation procedures, or deviations from recommended applications will affect product performances.

These notes are provided to ensure proper installation of Simpson Strong-Tie® products and must be followed fully.

- Simpson Strong-Tie® reserves the right to change specifications, designs and models without notice.
- Steel used for each Simpson Strong-Tie® product is individually selected based on the product's steel specifications, including strength, thickness, formability, finish, and can be welded. Contact factory for steel information on specific products.
- Unless otherwise noted, dimensions are in millimeters [mm] and loads are in kilo Newtons [kN].
- Unless otherwise noted, product performances are for use with C16 (SC3) timber.
- Unless otherwise noted, bending steel on site may cause fractures at the bend line. Fractured steel will not carry the load and must be replaced. Products designed for bending at time of installation should only be bent once.
- A fastener that splits timber will not take the design load. Evaluate splits to determine if the connection will perform as required. Dry wood may split more easily and should be evaluated as required. If wood tends to split, consider pre-drilling holes with diameters not exceeding 75% of the nail diameter.
- Take wood shrinkage into account when designing and installing connections. Simpson Strong-Tie® manufactures products to fit common dry timber dimensions. If you require a connector with dimensions other than those listed, Simpson may be able to vary connector dimensions; contact the factory.
- Top fix hangers may cause unevenness. Possible remedies should be evaluated by a professional and include using a face-fixing hanger or removing material to accommodate the top flange thickness.
- Multiple member timbers must be fastened together to act as one unit to resist the applied load.
- Do not overload. Do not exceed the product performance which would jeopardise the connection.
- Some model configurations may differ from illustrations shown. Contact factory for details.
- Fill all fastener holes with fastener types specified in the tables, unless otherwise noted. When nailing options are noted, the fasteners must be the correct type and location to obtain full loading.
- Hanger options - some combinations of hanger options have not been evaluated. In some cases, combinations of these options may not be installed. Horizontal loads induced by sloped joists must be resisted by other members in the structural system. A qualified engineeer must always evaluate each connection, including the carried and carrying member limitations, before specifying the product.

Instructions to the Installer

- All specified fasteners must be installed according to the instructions for each connector. Incorrect fastener quantity, size, type, material, or finish may cause the connection to fail.
- Install all specified fasteners before loading the connection.
- Pneumatic or power-actuated fasteners may deflect and injure the operator or others. Nail guns may be used to install connectors, provided the correct number and type of nails are properly installed in the holes provided.
- Guns with hole locators should be used. Follow the manufacturer's instructions and use appropriate safety equipment.
- Protruding nails should always be clinched to avoid injury.
- Masonry supported connectors must be embedded into correct strength mortar as per British Standard.
- Hangers into masonry walls must have the minimum specified height of masonry above the hanger, with the mortar fully cured, before load is applied. Top fix masonry hangers will not carry the design load without specified masonry above the top flange of the hanger. The exception to this would be the use of the Safety Fast range of products. Safety Fast hangers allow construction work to continue safely just 3 days after the supporting block work has been laid.

Instructions to the Designer

- Characteristic capacities specified in this catalogue are based on C16 timber grades unless otherwise specified and are presented for use with Limit State Design methods in accordance with Eurocode 5.
- The Safe Working Loads (SWL) shown in the Simpson Strong-Tie® publications for the United Kingdom are derived from tests, calculations and assessments performed in the UK.
- Safe Working Loads (SWL) are presented for use in permissible stress design in accordance with BS 5268: Part 2: 2002 for Service Classes 1 and 2.
- Wood shear is not considered in the loads given; reduce allowable loads when wood shear is limiting.
- Simpson Strong-Tie® strongly recommends the following addition to construction drawings and specifications: substitutions for Simpson Strong-Tie® products must be pre-approved in writing by the designer.
- Verify that the dimensions of the supporting members are sufficient to receive the specified fasteners.
- Some catalogue illustrations show connections that could cause cross grain tension or bending of timber if not sufficiently reinforced.

C-C-UK-2023 ©2023 SIMPSON STRONG-TIE COMPANY INC.

Options and Terminology

This information applies only to hangers manufactured by Simpson Strong-Tie® and installed as per our installation instructions. Some combinations of these options on a single hanger have not been evaluated. In some cases, combinations of these options may not be installable. A qualified engineer must always evaluate each connection, including header and joist limitations, before specifying the product.

Testing is performed using a standardised hanger test method. The joist in the test set up may include a certain amount of structural stability. Header and other attached structural members are assumed fixed in actual installations. Horizontal loads, induced by sloped joists, must be resisted by other members in the structural system.

Material: Material thickness may vary from that specified for standard hanger configurations, depending on the manufacturing process. Generally welded hangers have one-piece stirrups; occasionally it may be necessary to create a welded stirrup from two or three pieces. Hanger configurations, height and fastener schedules may vary from the table depending on the joist size, skew and slope.

Finish: See specific hanger tables. Welded hangers can be supplied with a galvanised or zinc plated finish.

Installation: Fastener quantities may be increased beyond the amount specified in the standard hanger table. Fill all holes with the table specified fastener type.

Terminology - refer to the table below for limits and possible combinations.

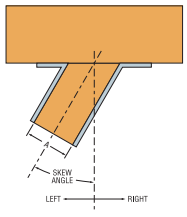

Skewed Seat

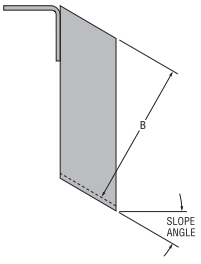

Sloped Seat

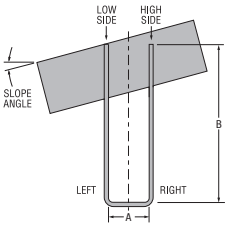

Sloped Top Flange

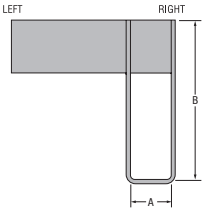

Offset Top Flange

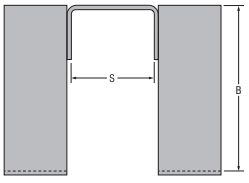

Straddle

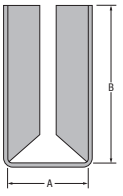

Concealed Flanges

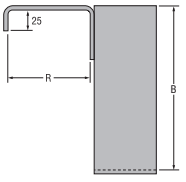

Return Top Flange

Skewed Seat: Skewed left or right, on plan. Suitable for floor or roof members skewed at an angle to the support. Specify skew angle and direction.

Sloped Seat: Sloped up or down on plan. Suitable for roof rafters supported on ridge beam. Specifiy slope angle and up or down.

Sloped Top Flange: Top flange sloped down to the left or right. Suitable for roof member supported on main rafter. Specify slope angle to horizontal, slope down to left or right and low, centre or high side of stirrup flush with header.

Offset Top Flange: Stirrup is offset to right or left end of the top flange, as viewed from joist. Suitable for support of trimmer beams from end of main beam. Specify offset right or left.

Straddle: Two stirrups directly opposite each other. Suitable for support of joists on either side of main support beam. Specify width of support beam or wall.

Concealed Flanges: SAI hangers flanges concealed. Specify both flanges or single left or right flange concealed. For SAI minimum width 100mm.

Return Top Flange: Masonry JHM(I) & HJHM(I) hanger. Specify return R dimension.

Model	Skewed Max. Angle	Sloped Max. Angle	Sloped Top Flange	Offset Top Flange	Return	Straddle	Combination
HB	45°	45°					
HJHM(I)	-	-	-		•	•	
JHM(I)	45°	-	-		•	•	
RHMSK	90°	-	-				
SAE	67.5°	45°	-				•

C-C-UK-2023 ©2023 SIMPSON STRONG-TIE COMPANY INC.

Fastening Identification

Round Holes
Purpose:
To fasten a connector.
Fill Requirements: Always fill, unless noted otherwise.

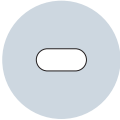

Obround Holes
Purpose: To make fastening a connector in a tight location easier.
Fill Requirements: Always fill.

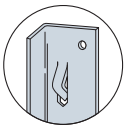

Speed Prongs
Used to temporarily position and secure the connector for easier and faster installation.

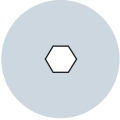

Hexagonal Holes
Purpose: To fasten using structural wood screws.

Triangular Holes
Purpose: To increase a connector's strength or to achieve max. strength.
Fill Requirements: When the Designer specifies max. nailing.

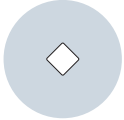

Diamond Holes
Purpose: To temporarily fasten a connector to make installing it easier. **Fill Requirements:** None.

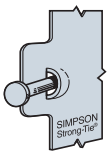

Dome Nailing
This feature guides the nail into the joist and header at a 45° angle.

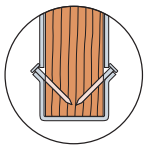

Positive Angle Nailing (PAN)
Provided when wood splitting may occur, and to speed installation.

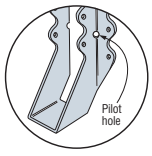

Pilot Holes
Tooling holes for manufacturing purposes. No fasteners required.

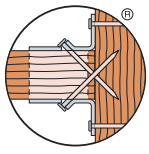

Double-Shear Nailing
The nail is installed into the joist and header, distributing the load through two points on each joist nail for greater strength. Double-shear nailing must be full-length catalogue nail.

Nailing Information

Many Simpson Strong-Tie® products are designed to use common nails, readily available to builders.

Certain applications require special fasteners, such as those with length limitations or for use in hostile environments.

This section shows common nails referred to in our design literature along with special fasteners we supply upon request.

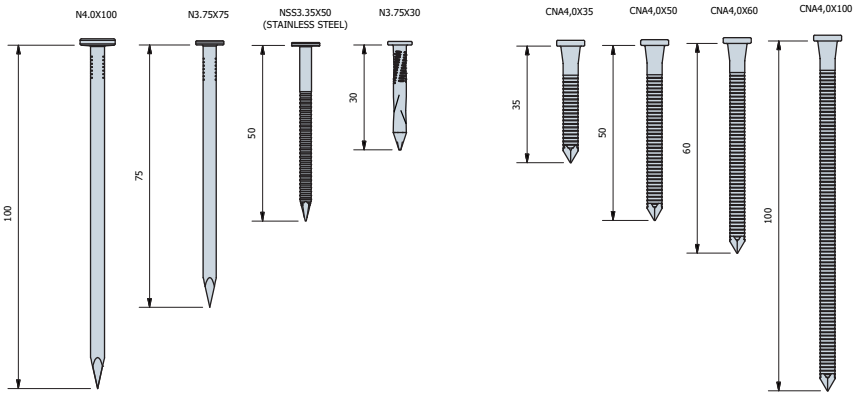

Recommended Fixing References

STN — Recommended to be fixed with the N3.75 square twist nail.

CNA — Recommended to be fixed with ring shank nails.

RWN — Recommended to be fixed with round wire nails.

CSA — Recommended to be fixed with structural timber screws.

SSH — Recommended to be fixed with SSH screws.

SDW — Recommended to be fixed with Strong-Drive® SDW screws.

C-C-UK-2023 ©2023 SIMPSON STRONG-TIE COMPANY INC.

CSA Structural Timber Screw

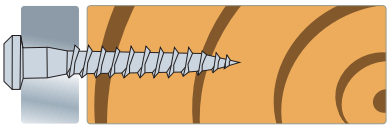

The CSA is a self-drilling flat head screw with a type 17 point tip, suitable for installing construction connectors such as angle brackets or joist hangers, to solid sawn and engineered timber joists.

- Use to install selected Simpson Strong-Tie connectors.
- Pan head.
- Type 17 point.
- BIT (T20) not included.

Material: Carbon steel with clear zinc coating, or stainless steel

Carbon Steel

Stainless Steel

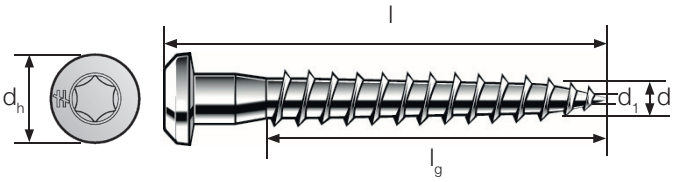

Product Dimensions

	References	l [mm]	l_g [mm]	d_1 [mm]	d [mm]	d_h [mm]
	CSA4.0x30	30	24	2.5	3.9	7.3
	CSA5.0x25	25	19	3.2	4.9	8.3
SS	CSA5.0x25S	25	19	3.2	4.9	8.3
	CSA5.0x35	35	29	3.2	4.9	8.3
SS	CSA5.0x35S	35	29	3.2	4.9	8.3
	CSA5.0x40	40	34	3.2	4.9	8.3
SS	CSA5.0x40S	40	34	3.2	4.9	8.3
	CSA5.0x50	50	44	3.2	4.9	8.3

Performance Values

	References	Characteristic Lateral Capacities $F_{lat,k}$ [kN] / Material Thickness [mm]			Characteristic Axial Capacity $F_{ax,k}$ [kN]
		1.2	1.5 to 2.0	2.5 to 4.0	
	CSA4.0x30	1.37	1.36	1.32	1.28
	CSA5.0x25	1.51	1.49	1.46	1.38
SS	CSA5.0x25S	1.51	1.49	1.46	1.38
	CSA5.0x35	2.01	1.99	1.94	2.11
SS	CSA5.0x35S	2.01	1.99	1.94	2.11
	CSA5.0x40	2.27	2.25	2.20	2.47
SS	CSA5.0x40S	2.27	2.25	2.20	2.47
	CSA5.0x50	2.63	2.63	2.63	3.20

- Performance values based upon timber density of 350 kg/m³.

NSS Stainless Steel Nail

The NSS nail is a stainless steel fixing used in conjunction with stainless steel connectors and stainless steel straps.

- The flat head of the nail allows full contact with the connector or strap.
- Annular ring thread.

Material: Stainless steel

Product Dimensions

Reference	l [mm]	l_g [mm]	d [mm]	d_h [mm]
NSS3.35x50	50	35	3.6	8

Structural Parameters

Reference	Yield Moment M_{yk} [Nm]	Withdrawal Parameter $F_{ax,k}$ [N/mm²]	Head Pull Through $F_{head,k}$ [N/mm²]	Tensile Capacity $f_{tens,k}$ [kN]
NSS3.35x50	5.1	7.4	26.6	6.4

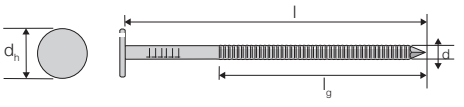

C-C-UK-2023 ©2023 SIMPSON STRONG-TIE COMPANY INC.

CNA Annular Ring Shank Nail

Carbon Steel

Stainless Steel

Annular ring-shank nails are recommended for structural assemblies and use with Simpson Strong-Tie connectors.

Features:

- The conical shape under the head ensures that the nail is fully in contact with the hole.
- Annular ring thread.
- Electro-galvanised coating or stainless steel.

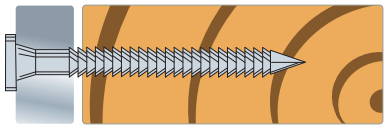

Product Dimensions

	References	l [mm]	l_g [mm]	d [mm]	d_h [mm]	h_t [mm]
	CNA4.0x35	35	19	4.4	8.0	1.5
	CNA4.0x40	40	24	4.4	8.0	1.5
SS	CNA4.0x40S	40	24	4.4	8.0	1.5
	CNA4.0x50	50	34	4.4	8.0	1.5
SS	CNA4.0x50S	50	34	4.4	8.0	1.5
	CNA4.0x60	60	44	4.4	8.0	1.5
SS	CNA4.0x60S	60	44	4.4	8.0	1.5

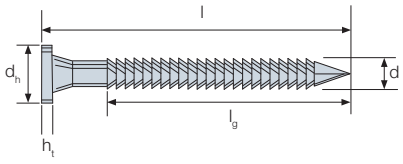

Performance Values

	References	Characteristic Lateral Capacities $F_{lat,k}$ [kN] / Material Thickness [mm]			Characteristic Axial Capacity $F_{ax,k}$ [kN]
		1.2	1.5 to 2.0	2.5 to 4.0	
	CNA4.0x35	1.67	1.66	1.61	0.61
	CNA4.0x40	1.87	1.85	1.80	0.74
SS	CNA4.0x40S	1.87	1.85	1.80	0.74
	CNA4.0x50	2.22	2.22	2.20	0.98
SS	CNA4.0x50S	2.22	2.22	2.20	0.98
	CNA4.0x60	2.36	2.36	2.36	1.23
SS	CNA4.0x60S	2.36	2.36	2.36	1.23

- Performance values based upon timber density of 350 kg/m³.

N3.75 Square Twist Nail

Tested and approved for use when installing Simpson Strong-Tie joist hangers, brackets and straps. Internal use only.

Features:

- Square twist profile.
- Sheradised coating.

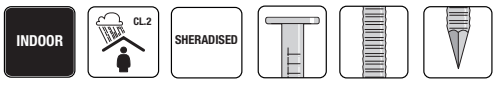

Product Dimensions

References	l [mm]	d [mm]	d_h [mm]
N3.75x30SH/1KG	30	3.8	8.0
N3.75x30SH/2.5KG	30	3.8	8.0
N3.75x30SH/5KG	30	3.8	8.0
N3.75x30SH/25KG	30	3.8	8.0

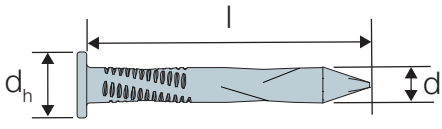

Structural Parameters

Reference	Yield Moment M_{yk} [Nm]	Withdrawal Parameter $F_{ax,k}$ [N/mm²]	Head Pull Through $F_{head,k}$ [N/mm²]	Tensile Capacity $f_{tens,k}$ [kN]
N3.75x30SH	5.2	4.8	24.5	5.8

C-C-UK-2023 ©2023 SIMPSON STRONG-TIE COMPANY INC.

Structural Screws for Multi-Ply Timber

ESCR Washer Head Structural Timber Screw

ESCRC Countersunk Head Structural Timber Screw

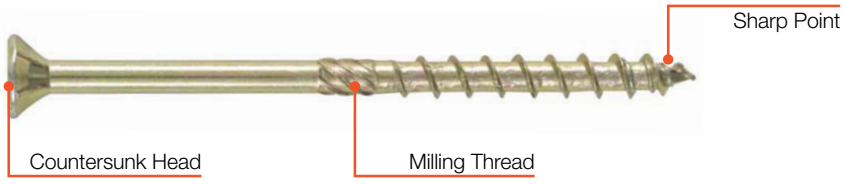

ESCRFTC Fully Threaded Countersunk Head Structural Timber Screw

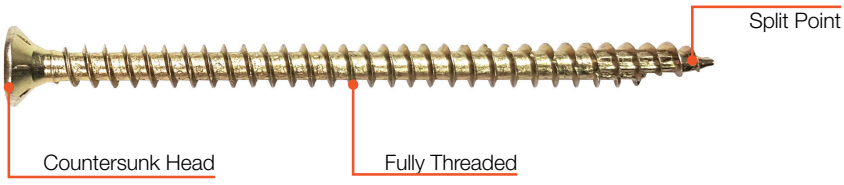

Fully Threaded Cylinder Head Structural Timber Screw

Non stocked item. Please contact Simpson Strong-Tie for information on available sizes.

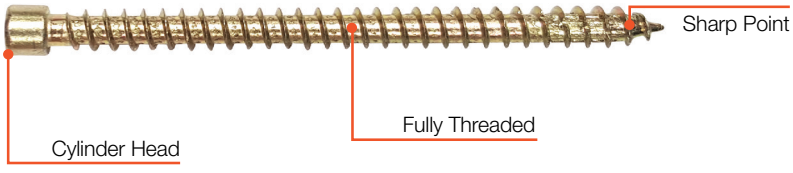

Hex Head and 6 Lobe Drive Structural Timber Screw

Non stocked item. Please contact Simpson Strong-Tie for information on available sizes.

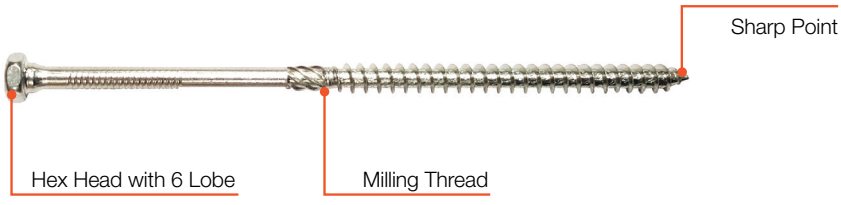

C-C-UK-2023 ©2023 SIMPSON STRONG-TIE COMPANY INC.

Structural Screws for Multi-Ply Timber

Simpson Strong-Tie® has developed a range of structural screws to meet the demands of the construction industry. The screw ranges are designed to meet the needs of contractor's building in timber frame, SIP (Structural Insulated Panel), CLT (Cross Laminated Timber) and Glulam, but also for joining together multiple truss plies and I-Joists, metal web and solid joists.

Design Methods

Performance values for both design methods (Permissible and Limit State) are listed and have been determined as follows:

Permissible Design (BS5268-2) (Safe Working Loads)

The calculations in Annex G, of BS5268-2, have been used to determine the performance tables in Section 6 of the same standard. They can also be used to determine the other lateral loads of varying connections, which are listed in the following pages.

Joints should be designed so that the permissible loads applied to the fasteners or timbers do not exceed the design loads of the structure.

Limit State Design (EN1995-1-1 or Eurocode 5) (Characteristic Loads)

The guidelines laid out in Section 8 of EN1995-1-1, are to be used to determine the withdrawal and lateral performance of a connection when using the Limit State Design method.

Connections should be designed so that the design reactions applied to the structure do not exceed the design capacity of the connection.

Spacings and Edge / End Distances should be complied with, as laid out within the relevant standard, to ensure full capacity of the connection is achieved. Any reduction in the recommendations will result in a reduction of the connection performance and should be verified by the engineer responsible for the design of the building.

C-C-UK-2023 ©2023 SIMPSON STRONG-TIE COMPANY INC.

SDW Structural Timber Screw

The Strong-Drive® SDW screw is a 8.0mm thread diameter, high-strength structural timber screw specifically designed for fastening multi-ply timber members together such as plated trusses, engineered timber products and solid-sawn timber.

The SDW installs easily with no pre-drilling and is available in optimized lengths for fastening 2, 3 and 4-ply trusses or 45mm engineered timber such as Laminated Veneer Lumber (LVL). The SDW enables single-side fastening, while still allowing concurrent loading on both sides of the assembly to the full allowable head or point-side load of the fastener.

- Low-profile head for reduced interference during handling or installation of hardware on the assembly.
- High shear values enable wider screw spacing.
- Bold thread design firmly clinches plies together to close gaps in multi-ply assemblies.
- Optimal screw lengths provide maximum point side penetration.
- T40 6-Lobe bit for positive driving.

Material: Heat treated carbon steel. Finish: Black E-coat™.

Warning: Industry studies show that hardened fasteners can experience performance problems in wet or corrosive environments. Accordingly, the SDW timber screws should only be used in dry, interior and non-corrosive environments e.g. Service class 1 & 2.

Installation:

- SDW screws install best with an impact driver and a T40 6-lobe bit (one bit included in the box).
- Pre-drilling is typically not required. SDW screws may be installed through metal truss plates as approved by the truss designer.
- Drive the fastener so that the top of the head is slightly embedded into the top surface of the timber. To ensure correct performance, do not under or over-drive the fastener.
- Individual screw locations may be adjusted up to 75mm to avoid conflicts with other hardware or to avoid timber defects.

Product Dimensions

References	l [mm]	l_g [mm]	d_1 [mm]	d [mm]	d_h [mm]	
SDW22258-R50E	66	36	5.6	8.0	19.0	T40
SDW22300-R50E	76	37	5.6	8.0	19.0	T40
SDW22338-R50E	86	40	5.6	8.0	19.0	T40
SDW22438-R50E	111	37	5.6	8.0	19.0	T40
SDW22458-R50E	117	37	5.6	8.0	19.0	T40
SDW22500-R50E	127	40	5.6	8.0	19.0	T40
SDW22600-R50E	152	37	5.6	8.0	19.0	T40
SDW22638-R50E	162	37	5.6	8.0	19.0	T40
SDW22634-R50E	172	40	5.6	8.0	19.0	T40

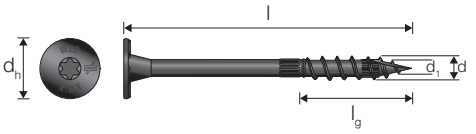

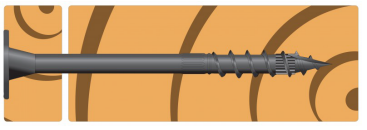

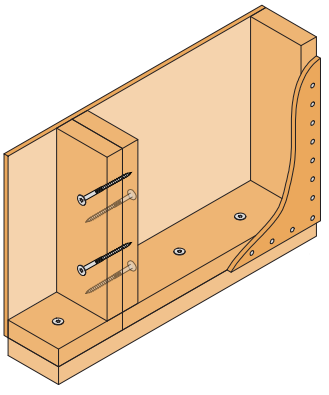

Structural Parameters

References	Yield Moment Threaded Section $M_{y,k}$ [Nm]	Yield Moment Smooth Section $M_{y,k}$ [Nm]	Withdrawal Parameter $f_{ax,k}$ [N/mm²]	Head Pull Through $f_{head,k}$ [N/mm²]	Tensile Capacity $f_{tens,k}$ [kN]	Torsional Strength $f_{tor,k}$ [kN]
SDW	17.4	31.6	13.2	21.4	21.4	24.2

Mechanical properties based on timber density 350 kg/m³ Grade C24

C-C-UK-2023 ©2023 SIMPSON STRONG-TIE COMPANY INC.

ESCR Washer Head Structural Timber Screw

The ESCR screws have a washer head and 6 lobe drive to aid installation and give excellent pull-through capacities.

Material: Heat treated carbon steel.

Benefits

- High pull-out resistance.
- Reamer allows smooth driving.
- Connects two or more timbers together.

Finish: Electrogalvanised with yellow finish and anti-friction coating. Zinc coating thickness ≥ 5µm.

Warning: Industry studies show that hardened fasteners can experience performance problems in wet or corrosive environments. Accordingly, the ESCR timber screws should only be used in dry, interior and non-corrosive environments e.g. Sevice class 1 & 2.

Installation:

- ESCR screws install best with an impact driver and a T40 or T50 6-lobe bit (included in the box).
- Pre-drilling is typically not required. ESCR screws may be installed through metal truss plates as approved by the truss designer.
- Drive the fastener so that the top of the head is slightly embedded into the top surface of the timber. To ensure correct performance, do not under or over drive the fastener.
- Individual screw locations may be adjusted up to 75mm to avoid conflict with other hardware or to avoid timber defects.

Product Dimensions

References	l [mm]	l_g [mm]	d_1 [mm]	d [mm]	d_h [mm]	
ESCR8.0X80	80	54	5.3	8.0	20.0	T40
ESCR8.0X100	100	54	5.3	8.0	20.0	T40
ESCR8.0X120	120	54	5.3	8.0	20.0	T40
ESCR8.0X140	140	84	5.3	8.0	20.0	T40
ESCR8.0X160	160	84	5.3	8.0	20.0	T40
ESCR8.0X180	180	100	5.3	8.0	20.0	T40
ESCR8.0X200	200	100	5.3	8.0	20.0	T40
ESCR8.0X220	220	100	5.3	8.0	20.0	T40
ESCR8.0X240	240	100	5.3	8.0	20.0	T40
ESCR8.0X260	260	100	5.3	8.0	20.0	T40
ESCR8.0X280	280	100	5.3	8.0	20.0	T40
ESCR8.0X300	300	100	5.3	8.0	20.0	T40
ESCR8.0X320	320	100	5.3	8.0	20.0	T40
ESCR8.0X340	340	100	5.3	8.0	20.0	T40
ESCR8.0X360	360	100	5.3	8.0	20.0	T40
ESCR8.0X400	400	100	5.3	8.0	20.0	T40
ESCR10.0x120	120	60	6.2	10.0	25.0	T50
ESCR10.0x140	140	60	6.2	10.0	25.0	T50
ESCR10.0x160	160	100	6.2	10.0	25.0	T50
ESCR10.0x180	180	100	6.2	10.0	25.0	T50
ESCR10.0x200	200	100	6.2	10.0	25.0	T50
ESCR10.0x220	220	100	6.2	10.0	25.0	T50
ESCR10.0x240	240	100	6.2	10.0	25.0	T50
ESCR10.0x260	260	100	6.2	10.0	25.0	T50
ESCR10.0x280	280	100	6.2	10.0	25.0	T50
ESCR10.0x300	300	100	6.2	10.0	25.0	T50
ESCR10.0x320	320	100	6.2	10.0	25.0	T50
ESCR10.0x340	340	100	6.2	10.0	25.0	T50
ESCR10.0x360	360	100	6.2	10.0	25.0	T50
ESCR10.0x400	400	100	6.2	10.0	25.0	T50

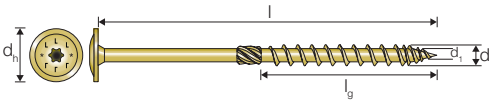

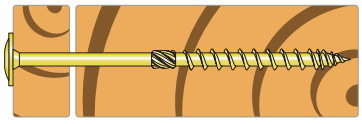

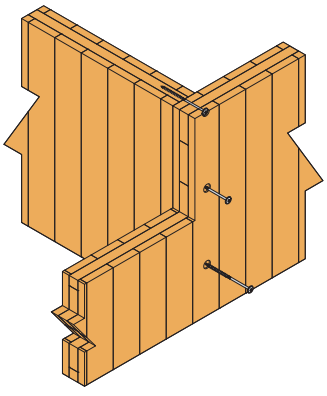

Typical Installation of ESCR with cross-laminated timber

Structural Parameters

References	Yield Moment $M_{y,k}$ [Nm]	Withdrawal Parameter $f_{ax,k}$ [N/mm²]	Head Pull-Through $f_{head,k}$ [N/mm²]	Tensile Capacity $f_{tens,k}$ [kN]	Torsional Strength $f_{tor,k}$ [kN]
ESCR8.0	22.6	10.7	17.6	22.7	25.6
ESCR10.0	33.0	9.5	15.2	33.2	47.5

Mechanical properties based on timber density 350 kg/m³ Grade C24

C-C-UK-2023 ©2023 SIMPSON STRONG-TIE COMPANY INC.

ESCRC Countersunk Structural Timber Screw

The ESCRC is a countersunk head screw designed to connect two or more timber members together. The ESCRC screw has a reamer to allow for smooth driving of the shank. The countersunk head gives flush fitting while allowing the timber members to close up firmly.

- Countersinking head.
- 6 lobe drive.

Material: Heat treated carbon steel.

Benefits:

- High pull-out resistance.
- Reamer reduces drive resistance for faster installation.

Finish: Electrogalvanised with yellow finish and anti-friction coating. Zinc coating thickness ≥ 5µm.

Warning: Industry studies show that hardened fasteners can experience performance problems in wet or corrosive environments. Accordingly, the ESCRC timber screw should only be used in dry, interior and non-corrosive environments. (e.g. Service class 1 & 2).

Installation:

- ESCRC screws install with an impact driver and a T20, T30, T40 or T50 6-lobe bit (included in the box).
- Drive the fastener so that the top of the head is slightly embedded into the top surface of the timber. To ensure correct performance, do not under or over drive the fastener.
- Individual screw locations may be adjusted up to 75mm to avoid conflict with other hardware or to avoid timber defects.

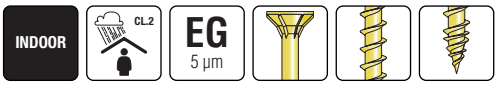

Product Dimensions

References	l [mm]	l_g [mm]	d_1 [mm]	d [mm]	d_h [mm]	
ESCRC6.0X60	60	36	4.3	6.0	12.0	T30
ESCRC6.0X80	80	48	4.3	6.0	12.0	T30
ESCRC6.0X90	90	48	4.3	6.0	12.0	T30
ESCRC6.0X100	100	48	4.3	6.0	12.0	T30
ESCRC6.0X120	120	64	4.3	6.0	12.0	T30
ESCRC6.0X140	140	64	4.3	6.0	12.0	T30
ESCRC6.0X160	160	64	4.3	6.0	12.0	T30
ESCRC6.0X180	180	64	4.3	6.0	12.0	T30
ESCRC6.0X200	200	64	4.3	6.0	12.0	T30
ESCRC6.0X240	240	64	4.3	6.0	12.0	T30
ESCRC6.0X300	300	64	4.3	6.0	12.0	T30
ESCRC8.0X80	80	54	5.9	8.0	15.0	T40
ESCRC8.0X100	100	54	5.9	8.0	15.0	T40
ESCRC8.0X120	120	54	5.9	8.0	15.0	T40
ESCRC8.0X140	140	84	5.9	8.0	15.0	T40
ESCRC8.0X160	160	84	5.9	8.0	15.0	T40
ESCRC8.0X180	180	100	5.9	8.0	15.0	T40
ESCRC8.0X200	200	100	5.9	8.0	15.0	T40
ESCRC8.0X220	220	100	5.9	8.0	15.0	T40
ESCRC8.0X240	240	100	5.9	8.0	15.0	T40

References	l [mm]	l_g [mm]	d_1 [mm]	d [mm]	d_h [mm]	
ESCRC8.0X260	260	100	5.9	8.0	15.0	T40
ESCRC8.0X280	280	100	5.9	8.0	15.0	T40
ESCRC8.0X300	300	100	5.9	8.0	15.0	T40
ESCRC8.0X320	320	100	5.9	8.0	15.0	T40
ESCRC8.0X380	380	100	5.9	8.0	15.0	T40
ESCRC8.0X400	400	100	5.9	8.0	15.0	T40
ESCRC10.0X80	80	60	7.1	10.0	18.5	T50
ESCRC10.0X100	100	60	7.1	10.0	18.5	T50
ESCRC10.0X120	120	60	7.1	10.0	18.5	T50
ESCRC10.0X140	140	60	7.1	10.0	18.5	T50
ESCRC10.0X180	180	100	7.1	10.0	18.5	T50
ESCRC10.0X200	200	100	7.1	10.0	18.5	T50
ESCRC10.0X220	220	100	7.1	10.0	18.5	T50
ESCRC10.0X240	240	100	7.1	10.0	18.5	T50
ESCRC10.0X260	260	100	7.1	10.0	18.5	T50
ESCRC10.0X280	280	100	7.1	10.0	18.5	T50
ESCRC10.0X300	300	100	7.1	10.0	18.5	T50
ESCRC10.0X320	320	100	7.1	10.0	18.5	T50
ESCRC10.0X340	340	100	7.1	10.0	18.5	T50
ESCRC10.0X400	400	100	7.1	10.0	18.5	T50

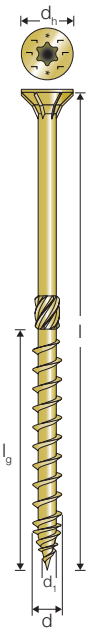

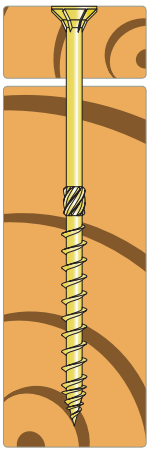

Structural Parameters

References	Yield Moment $M_{y,k}$ [Nm]	Withdrawal Parameter $f_{ax,k}$ [N/mm²]	Head Pull Through $f_{head,k}$ [N/mm²]	Tensile Capacity $f_{tens,k}$ [kN]	Torsional Strength $f_{tor,k}$ [kN]
ESCRC6.0	10.1	13.0	14.6	12.8	10.1
ESCRC8.0	22.6	10.7	12.4	22.7	25.6
ESCRC10.0	33.0	9.5	12.2	33.2	47.5

Mechanical properties based on timber density 350 kg/m³ Grade C24

C-C-UK-2023 ©2023 SIMPSON STRONG-TIE COMPANY INC.

ESCRFTC Fully Threaded Structural Timber Screw

The ESCRFTC has a countersunk head and a 6 lobe drive to aid installation. The countersunk head allows for flush fitting, and the full thread gives extra withdrawal strength to the connection.

Material: Heat treated carbon steel.

Benefits

- Countersinking head.
- High withdrawal resistance.

Finish: Electrogalvanised with yellow finish and anti-friction coating. Zinc coating thickness ≥ 5µm.

Warning: Industry studies show that hardened fasteners can experience performance problems in wet or corrosive environments. Accordingly, the ESCRFTC timber screw should only be used in dry, interior and non-corrosive environments. (e.g. Service class 1 & 2).

Installation:

- ESCRFTC screws install best with an impact driver and a T40 or T50 6-lobe bit (included in the box).
- Drive the fastener so that the top of the head is slightly embedded into the top surface of the timber. To ensure correct performance, do not under or over drive the fastener.
- Individual screw locations may be adjusted up to 75mm to avoid conflicts with other hardware or to avoid timber defects.

Product Dimensions

References	l [mm]	l_g [mm]	d_1 [mm]	d [mm]	d_h [mm]	
ESCRFTC8.0X120	120	110	5.2	8.0	15.0	T40
ESCRFTC8.0X180	180	170	5.2	8.0	15.0	T40
ESCRFTC8.0X200	200	190	5.2	8.0	15.0	T40
ESCRFTC8.0X300	300	290	5.2	8.0	15.0	T40
ESCRFTC10.0X240	240	228	6.1	10.0	18.5	T50
ESCRFTC10.0X300	300	288	6.1	10.0	18.5	T50
ESCRFTC10.0X350	350	338	6.1	10.0	18.5	T50
ESCRFTC10.0X400	400	388	6.1	10.0	18.5	T50

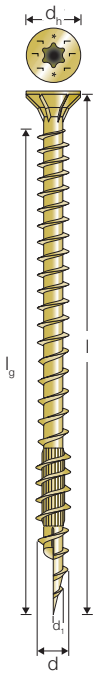

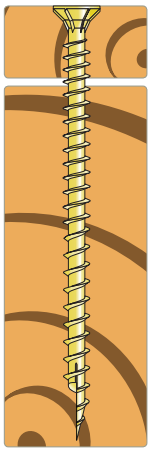

Structural Parameters

References	Yield Moment $M_{y,k}$ [Nm]	Withdrawal Parameter $f_{ax,k}$ [N/mm²]	Head Pull Through $f_{head,k}$ [N/mm²]	Tensile Capacity $f_{tens,k}$ [kN]	Torsional Strength $f_{tor,k}$ [kN]
ESCRFTC8.0	20.3	13.1	12.4	24.1	25.8
ESCRFTC10.0	36.7	12.5	12.2	40.0	55.0

Mechanical properties based on timber density 350 kg/m³ Grade C24

C-C-UK-2023 ©2023 SIMPSON STRONG-TIE COMPANY INC.

SSH Hexagon Head Connector Screw Impreg®+

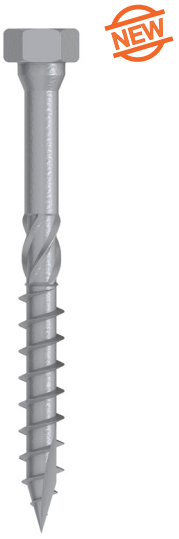

SSH is used together with connectors where high load capability is required. The conical shape under the head makes a perfect fitting to the connector hole, creating a firm assembly. Suitable for exterior use. The cut point type 17 prevents cracking, and the milling thread and serrated thread reduce the insertion torque. SSH has both 6 lobe drive and a hexagonal head, enabling mounting both with bits or with sleeves.

Features:

- Hex head with integrated 6 lobe drive
- Conical shape under the head for maximum fit in connector holes
- No pre-drilling required
- Milling thread
- Serrated coarse thread
- Type 17 point

Application:

- Connectors to wood

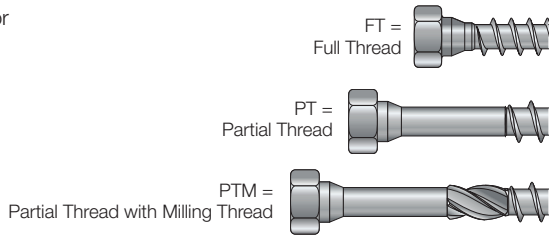

SSH Impreg®+ Coating

References	Product Code	Dimensions [mm]				Thread	
		l [mm]	l_g [mm]	d / d_{uh} [mm]	d_h [mm]		
SSH8.0X40	75134	40	Full thread	8.0	13	FT	T-40 / SW-13
SSH8.0X50	75135	50	Full thread	8.0	13	FT	T-40 / SW-13
SSH8.0X60	75136	60	42	8.0	13	PT	T-40 / SW-13
SSH8.0X80	75137	80	42	8.0	13	PTM	T-40 / SW-13
SSH8.0X90	75138	90	42	8.0	13	PTM	T-40 / SW-13
SSH8.0X100	75139	100	55	8.0	13	PTM	T-40 / SW-13
SSH8.0X120	75140	120	85	8.0	13	PTM	T-40 / SW-13
SSH8.0X140	75141	140	85	8.0	13	PTM	T-40 / SW-13
SSH8.0X160	75142	160	110	8.0	13	PTM	T-40 / SW-13
SSH8.0X180	75143	180	110	8.0	13	PTM	T-40 / SW-13
SSH8.0X200	75144	200	110	8.0	13	PTM	T-40 / SW-13
SSH8.0X240	75145	240	110	8.0	13	PTM	T-40 / SW-13
SSH8.0X260	75146	260	110	8.0	13	PTM	T-40 / SW-13
SSH8.0X280	75147	280	110	8.0	13	PTM	T-40 / SW-13
SSH8.0X300	75148	300	110	8.0	13	PTM	T-40 / SW-13
SSH10.0X40	75149	40	Full thread	10.0	15	FT	T-40 / SW-15
SSH10.0X50	75150	50	Full thread	10.0	15	FT	T-40 / SW-15
SSH10.0X60	75151	60	42	10.0	15	PT	T-40 / SW-15
SSH10.0X80	75152	80	42	10.0	15	PTM	T-40 / SW-15
SSH10.0X90	75153	90	42	10.0	15	PTM	T-40 / SW-15
SSH10.0X100	75154	100	55	10.0	15	PTM	T-40 / SW-15
SSH10.0X120	75155	120	85	10.0	15	PTM	T-40 / SW-15
SSH10.0X140	75156	140	85	10.0	15	PTM	T-40 / SW-15
SSH10.0X160	75157	160	110	10.0	15	PTM	T-40 / SW-15
SSH10.0X180	75158	180	110	10.0	15	PTM	T-40 / SW-15
SSH10.0X200	75159	200	110	10.0	15	PTM	T-40 / SW-15
SSH10.0X240	75160	240	125	10.0	15	PTM	T-40 / SW-15
SSH10.0X280	75161	280	125	10.0	15	PTM	T-40 / SW-15

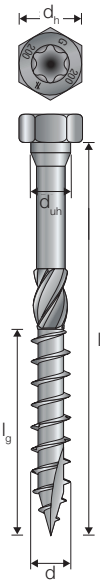

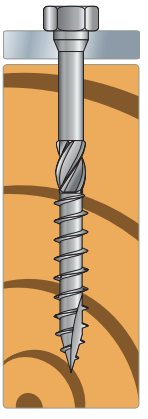

Product Characteristic Properties

References	Yield Moment [Nm] $M_{y,k}$	Withdrawal Parameter [N/mm²] $f_{ax,k,90°}$	Head Pull Through [N/mm²] $f_{head,k\,x}$	Tensile Capacity [kN] $f_{tens,k}$	Torsonial ratio
SSH8.0	29.4	15.6	22.0	23.2	3.1
SSH10.0	50.3	13.2	20.1	32.0	3.4

Mechanical properties based on timber density 350 kg/m³ Grade C24

C-C-UK-2023 ©2023 SIMPSON STRONG-TIE COMPANY INC.

SSH Hexagon Head Connector Screw Impreg®+

SSH Impreg®+ Coating

References	Product Code	Dimensions [mm]				Thread	
		l [mm]	l_g [mm]	d / d_{uh} [mm]	d_h [mm]		
SSH12.0X60	75162	60	Full thread	12.0	17	FT	T-40 / SW-17
SSH12.0X80	75163	80	42	12.0	17	PTM	T-40 / SW-17
SSH12.0X90	75164	90	42	12.0	17	PTM	T-40 / SW-17
SSH12.0X100	75165	100	55	12.0	17	PTM	T-40 / SW-17
SSH12.0X120	75166	120	85	12.0	17	PTM	T-40 / SW-17
SSH12.0X140	75167	140	85	12.0	17	PTM	T-40 / SW-17
SSH12.0X160	75168	160	110	12.0	17	PTM	T-40 / SW-17
SSH12.0X180	75169	180	110	12.0	17	PTM	T-40 / SW-17
SSH12.0X200	75170	200	110	12.0	17	PTM	T-40 / SW-17

Product Characteristic Properties

References	Yield Moment [Nm] $M_{y,k}$	Withdrawal Parameter [N/mm²] $f_{ax,k,90°}$	Head Pull Through [N/mm²] $f_{head,k\,x}$	Tensile Capacity [kN] $f_{tens,k}$	Torsonial ratio
SSH12.0	67.1	12.1	18.5	39.6	3.0

Mechanical properties based on timber density 350 kg/m³ Grade C24

SSH 6.0mm Hexagon Head Connector Screw Impreg®+

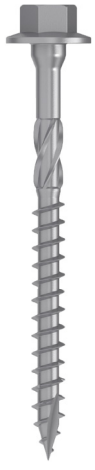

SSH is used together with connectors where high load capability is required. The conical shape under the head makes a perfect fitting to the connector hole, creating a firm assembly. Suitable for exterior use. The cut point type 17 prevents cracking, and the milling thread and serrated thread reduce the insertion torque. SSH has both 6 lobe drive and a hexagonal head, enabling mounting both with bits or with sleeves.

Features:

- Hex head with integrated 6 lobe drive
- Conical shape under the head for maximum fit in connector holes
- Milling thread
- Serrated coarse thread
- Type 17 point

Application:

- Connectors to wood

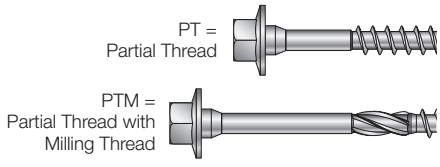

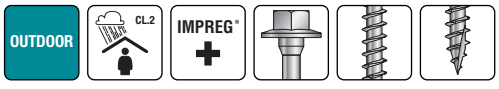

SSH6.0mm Impreg®+ Coating

References	Product Code	Dimensions [mm]				Thread	Bit
		l [mm]	l_g [mm]	d / d_{uh} [mm]	d_h [mm]		
SSH6.0X40	75128	40	23	6.0	10	PT	T-30 / SW-10
SSH6.0X50	75129	50	33	6.0	10	PT	T-30 / SW-10
SSH6.0X60	75130	60	42	6.0	10	PT	T-30 / SW-10
SSH6.0X75	75131	75	42	6.0	10	PTM	T-30 / SW-10
SSH6.0X90	75132	90	42	6.0	10	PTM	T-30 / SW-10
SSH6.0X120	75133	120	75	6.0	10	PTM	T-30 / SW-10

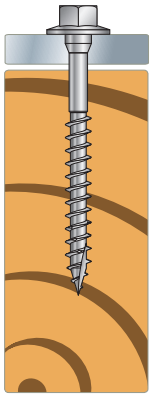

Product Characteristic Properties

References	Yield Moment [Nm] $M_{y,k}$	Withdrawal Parameter [N/mm²] $f_{ax,k,90°}$	Head Pull Through [N/mm²] $f_{head,k\,x}$	Tensile Capacity [kN] $f_{tens,k}$	Torsonial ratio
SSH6.0	12.4	16.9	31.8	12.8	2.5

Mechanical properties based on timber density 350 kg/m³ Grade C24

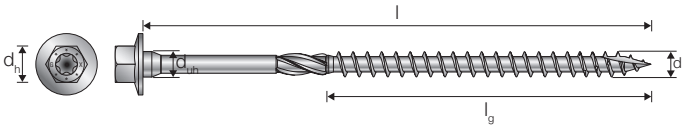

C-C-UK-2023 ©2023 SIMPSON STRONG-TIE COMPANY INC.

Roof Trusses

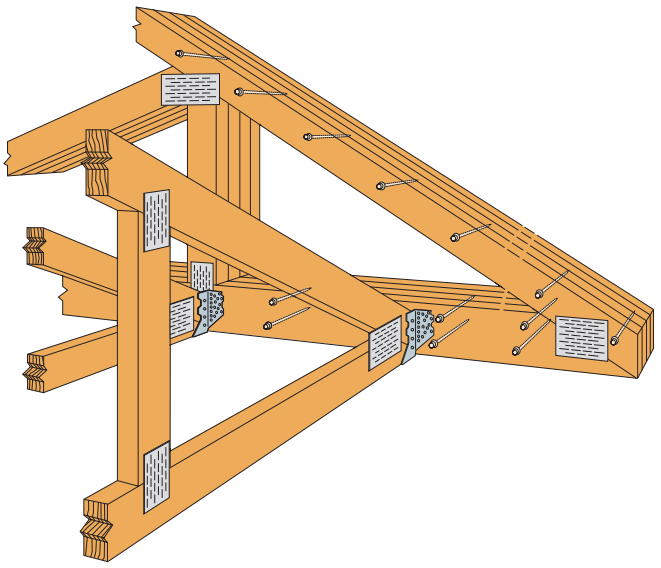

Simpson Strong-Drive® SDW and ESCR Screws can be used for a fast and effective connection of multi-ply roof trusses.

Installation:

- Screws can be installed from one side of the truss for faster installation.
- Screw heads shall be on the same side of the truss to which the hangers are attached.
- If screws are installed in the wrong face of the truss then install additional screws in the correct face with the maximum spacing of twice the required spacing but not exceeding 600mm centres.
- The additional screws shall be offset from the existing screws.
- If hangers or hanger fixings clash with the girder screws, relocate the girder screw as close as possible to the side flange of the hanger on the same screw line.

Multi-Ply Roof Truss References

Truss Plys	References	Safe Working Load [N] TR26 - Shear, Medium Term	Characteristic Loads [N] TR26 - $F_{v,Rk}$
2x35mm	SDW22258-R50E	980	2195
3x35mm	ESCR8.0x100	1090	2485
4x35mm	ESCR8.0x140	1180	2690
2x47mm	SDW22300-R50E	1140	2145
3x47mm	SDW22500-R50E	1200	2315
4x47mm	ESCR8.0x180	1200	3705

1. Loads are per shear plane assuming single shear. Timber to timber connections.
2. Screws are installed from 1 side only.

Design and Detailing:

- Where multiple trussed rafters are fastened together on site, the fastening of at least the ceiling tie members should be with screws or bolts, using the appropriate washer, in positions marked by the manufacturer, according to BS5268-3 clause 6.5.5.
- Spacing of loads applied to the multi-ply truss shall not exceed 600mm centres.
- The truss engineer shall ensure torsion due to loads coming into one side of the multi-ply truss is adequately catered for.
- Screws shall not be installed through metal truss plates unless approved by the truss engineer, pre-drilling is not required.
- Individual screw locations may be adjusted to avoid conflicts with other hardware or timber defects.
- Use maximum of 1 row of screws in members up to 120mm deep.
- Use 1 or 2 rows of screws up to 170mm deep (depending on capacity requirements).
- Use 1, 2 or 3 rows of screws in members over 171mm deep (depending on capacity requirements).

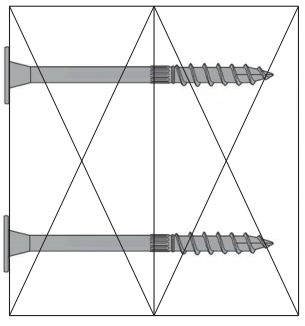

SDW 2 Ply Detail

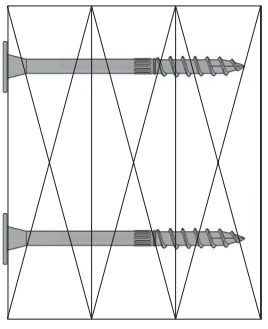

SDW 3 Ply Detail

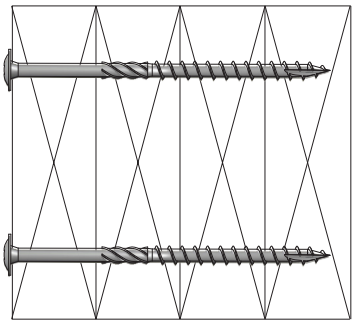

ESCR 4 Ply Detail

C-C-UK-2023 ©2023 SIMPSON STRONG-TIE COMPANY INC.

Timber Frame Panels

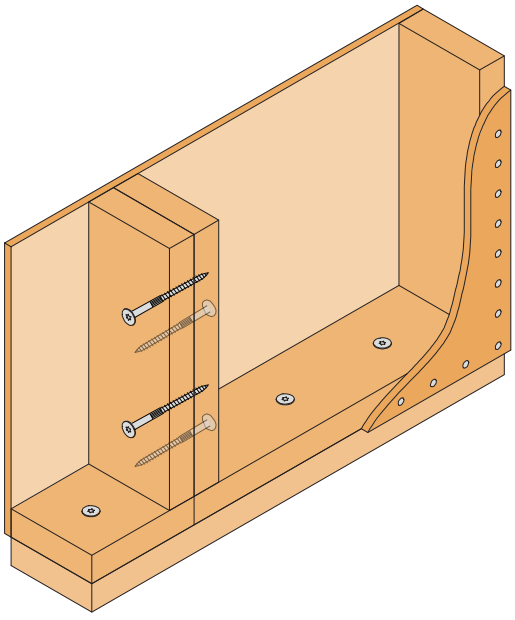

Simpson Strong-Drive® SDW Screws can be used for a fast and effective connection of Timber Frame Panels as shown below. The SDW screws allow for a permanent connection, pulling the two panels together, to help reduce air leakage at panel to panel junctions as well as panel to sole plate junctions.

Installation:

- All members shall be full length with no intermediate splices.
- Screws shall be installed with the screw heads in the loaded ply.
- Individual screw locations may be adjusted up to 1/2 of the required spacing to avoid conflicts with other hardware or timber defects.
- Use maximum of 1 row of screws in 89mm timber frame panels.
- Use 1 or 2 rows of screws in 140mm wide timber frame panels.
- The screw guns used to install the screws should have the following (minimum) specification: 100Nm torque, 14.4V or 18V battery and have impact driving functionality.
- The number of screws being installed needs to be considered against the constant high loads, at high torque, applied to the screw gun motor. Refer to manufacturer for motor loading conditions.

Safe Working Loads

Timber Plys	References	How to Install	C16 - Long Term Shear (Lateral) Load [N]	C16 - Long Term Withdrawal (Axial) Load [N]
2x38mm	SDW22300-R50E	From 1 Side	790	600

Characteristic Loads

Timber Plys	References	How to Install	C16 - Shear (Lateral) Load [N]	C16 - Withdrawal (Axial) Load [N]
2x38mm	SDW22300-R50E	From 1 Side	2430	2305

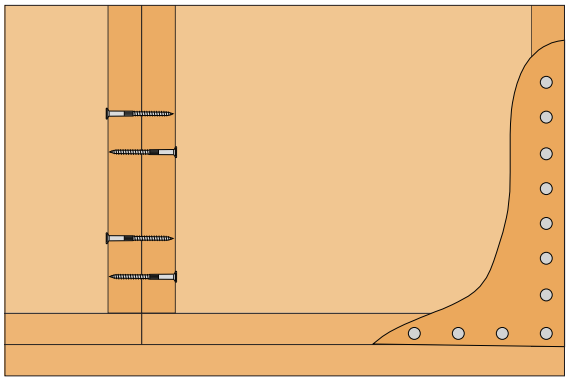

SDW screws can be fitted from one side or both sides if required.

C-C-UK-2023 ©2023 SIMPSON STRONG-TIE COMPANY INC.

Composite Panels

Simpson Strong-Drive® SDW and ESCR Screws can be used as a fast and effective connection of Composite Panels. For typical connections see details below. The screws are quick to start and both have a reamer allowing for smooth passage of the shank even into the denser composite materials.

Safe Working Loads (per screw)

Headside Timber Thickness [mm]	References	Safe Working Loads [N] Shear		Safe Working Loads [N] Axial	
		Long Term Load Duration		Long Term Load Duration	
		C16	C24	C16	C24
60	SWD22438-R50E	1050	1150	720	870
60	ESCR8.0x120	1320	1450	910	1100
80	SWD22438-R50E	980	1070	630	770
80	ESCR8.0x120	1160	1270	710	860
95-100	SDW22600-R50E	1120	1190	890	1080
95-100	ESCR8.0x140	1160	1270	710	860
111	SDW22600-R50E	1120	1130	700	850
111	ESCR8.0x160	1290	1420	870	1060
119	SDW22600-R50E	1060	1170	740	890
119	ESCR8.0x160	1170	1280	930	890
125	SDW22638-R50E	980	1070	630	770
125	ESCR8.0x160	1380	1470	980	1190
136	SDW22634-R50E	960	1060	620	750
136	ESCR8.0x180	1220	1330	780	950
140-145	ESCR8.0x180	1380	1470	980	1190
150	ESCR8.0x200	1300	1430	890	1080
162	ESCR8.0x200	1140	1240	680	820
175-180	ESCR8.0x220	1160	1270	710	860
190-195	ESCR8.0x240	1230	1350	800	970
206	ESCR8.0x260	1360	1470	960	1170
219	ESCR8.0x260	1170	1280	730	890

1. Loads are per shear plane assuming single shear timber to timber connections.

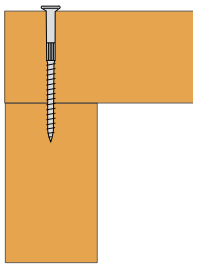

Typical Wall Corner Detail

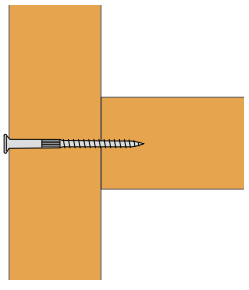

Typical Wall "T" Detail

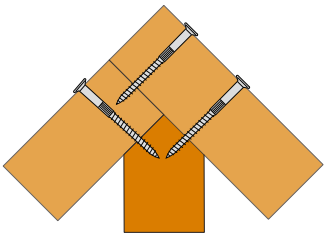

Typical Ridge Detail

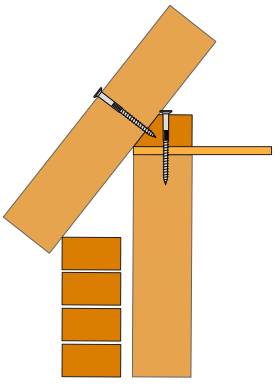

Typical Eaves Detail

C-C-UK-2023 ©2023 SIMPSON STRONG-TIE COMPANY INC.

Composite Panels

Characteristic Loads (per screw)

Thickness of Headside Timber [mm]	References	Characteristic Loads [N] Shear - $F_{v,Rk}$		Characteristic Loads [N] Axial - $F_{a,Rk}$	
		C16	C24	C16	C24
60	SWD22438-R50E	2830	3150	1810	2305
60	ESCR8.0x120	3500	3895	3420	4365
80	SWD22438-R50E	2695	2955	1810	2305
80	ESCR8.0x120	3105	3435	2685	3420
95-100	SDW22600-R50E	3325	3640	1810	2305
95-100	ESCR8.0x140	3235	3585	2685	3420
111	SDW22600-R50E	2880	3130	1810	2305
111	ESCR8.0x160	3670	4085	3290	4190
119	SDW22600-R50E	2960	3220	1810	2305
119	ESCR8.0x160	3405	3710	2750	3505
125	SDW22638-R50E	2730	2922	1810	2305
125	ESCR8.0x160	4020	4485	3690	4705
136	SDW22634-R50E	2680	2900	1760	2245
136	ESCR8.0x180	3620	3905	2950	3765
140-145	ESCR8.0x180	4155	4640	3690	4705
150	ESCR8.0x200	3980	4310	3355	4280
162	ESCR8.0x200	3265	3515	2550	3250
175-180	ESCR8.0x220	3385	3645	2685	3420
190-195	ESCR8.0x240	3685	3970	3020	3850
206	ESCR8.0x260	4245	4590	3625	4620
219	ESCR8.0x260	3445	3710	2750	3505
240	ESCR8.0x280	3385	3645	2685	3420
257	ESCR8.0x300	3560	3840	2885	3680
307	ESCR8.0x360	4180	4520	3555	4535

Installation:

- Screws are to be installed from one side of the composite panel.
- Position and number of screws are to be specified by the person responsible for building design.

Design and Detailing:

Individual screw locations may be adjusted to avoid conflicts with other hardware or timber defects, ensuring recommendations for spacing and edge distances are maintained.

C-C-UK-2023 ©2023 SIMPSON STRONG-TIE COMPANY INC.

Engineered Timber

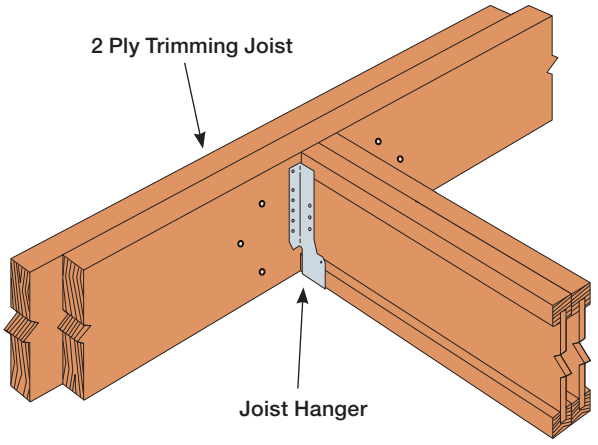

Connection Detail for a Multi-Ply Trimming Joist

Simpson Strong-Drive® SDW screws can be used for a fast and effective connection of solid rectangular multi-ply engineered timbers.

Installation:

- All members shall be full length with no intermediate splices.
- Screws shall be installed with the screw heads in the loaded ply.
- Individual screw locations may be adjusted up to 1/2 of the required spacing to avoid conflicts with other hardware or timber defects.
- The spacing of applied uniform loads to the multi-ply member shall not exceed 600mm centres (i.e. hanger spacing).
- Use maximum of 1 row of screws in members up to 120mm deep (depending on capacity requirements).
- Use 1 or 2 rows in members up to 170mm deep (depending on capacity requirements).
- Use 1, 2 or 3 rows of screws in members over 171mm deep (depending on capacity requirements).
- Screws with self-drilling tips require high torque to install, especially when installed into dense wood materials such as laminated veneer lumber (LVL).
- The screw guns used to install the screws should have the following (minimum) specification: 100Nm torque, 14.4V or 18V Battery and have impact driving functionality.
- The number of screws being installed needs to be considered against the constant high loads, at high torque, applied to the screw gun motor. Refer to manufacturer for motor loading conditions.

Multi-Ply Engineered Timber Performance Values

Timber Plys	References	Safe Working Loads [N]	Characteristic Loads [N]
		Long Term Shear	Shear – $F_{V,RK}$
		LVL	LVL
2 x 38mm	SDW22300-R50E	980	2900
2 x 45mm	SDW22338-R50E	1110	3110
2 x 75mm	SDW22500-R50E	1220	3810
2 x 89mm	SDW22634-R50E	1220	3810
3 x 38mm	SDW22438-R50E	1090	2950
3 x 45mm	SDW22500-R50E	1120	3070
4 x 38mm	SDW22600-R50E	1130	3115
4 x 45mm	SDW22634-R50E	1120	3070

1. Loads are per shear plane assuming single shear, timber-to-timber connections.
2. Equal plies assumed.
3. Calculations are based on timbers having a characteristic density of 370kg/m^3
4. Screws are installed from 1 side only.

C-C-UK-2023 ©2023 SIMPSON STRONG-TIE COMPANY INC.

Engineered Timber

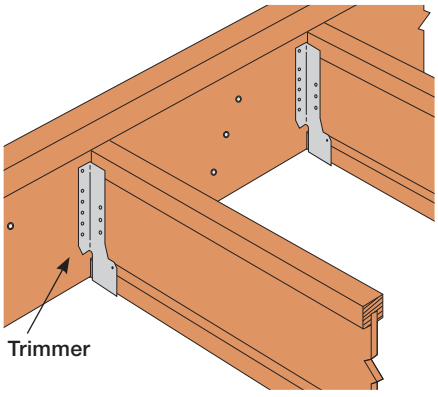

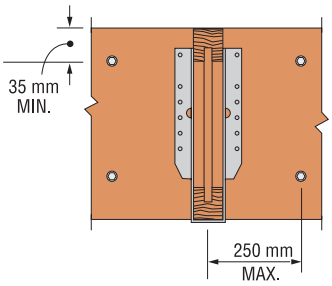

4 Screw Arrangement

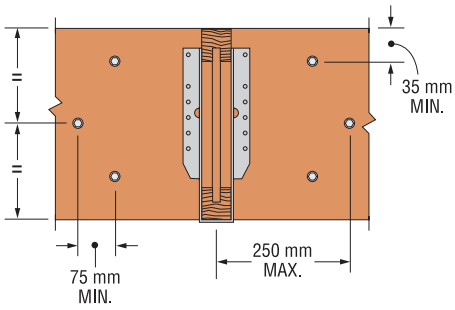

6 Screw Arrangement

See Load Transfer Table.

Connection Detail for a Multi-Ply Trimmer (UDL [1])

Timber Plys	References	Screw SWL [N]	Safe Working Loads Maximum UDL [1] [kN/m]			Screw Characteristic Load [N]	Characteristic Loads Maximum UDL [1] [kN/m]		
		SCL [2] Long Term	1 Row @ 600 ctrs	2 Row @ 600 ctrs	3 Row @ 600 ctrs	SCL [2] Long Term	1 Row @ 600 ctrs	2 Row @ 600 ctrs	3 Row @ 600 ctrs
2 x 38mm	SDW22300-R50E	980	3.27	6.53	9.80	2900	9.67	19.33	29.00
2 x 45mm	SDW22338-R50E	1110	3.70	7.40	11.10	3110	10.37	20.73	31.10
2 x 75mm	SDW22500-R50E	1220	4.07	8.13	12.20	3810	12.70	25.40	38.10
2 x 89mm	SDW22634-R50E	1220	4.07	8.13	12.20	3810	12.70	25.40	38.10
3 x 38mm	SDW22438-R50E	1090	2.73	5.45	8.18	2950	7.38	14.75	22.13
3 x 45mm	SDW22500-R50E	1120	2.80	5.60	8.40	3070	7.68	15.35	23.03
4 x 38mm	SDW22600-R50E	1130	2.51	5.02	7.53	3115	6.92	13.84	20.77
4 x 45mm	SDW22634-R50E	1120	2.49	4.98	7.47	3070	6.82	13.64	20.47

1. Uniformly Distributed Load.
2. Structural Composite Lumber
3. The load is uniformly distributed from hangers at regular centres of up to 600mm maximum.
4. To calculate the maximum allowable end reaction for each hanger - multiply the UDL by the spacing e.g. 3.51 x 0.6 = 2.1kN per hanger.
5. To calculate the maximum span of trimmed joists use the $\frac{2 \times \text{UDL (from above table)}}{\text{Floor Load (kN/m}^2)}$ e.g. $\frac{2 \times 3.51}{2.25} = 3.12\text{m}$

Load Transfer

Timber Plys	References	Maximum Safe Working Load [kN]		Maximum Characteristic Load [kN]	
		4 No. Screws	6 No. Screws	4 No. Screws	6 No. Screws
2 x 38mm	SDW22300-R50E	7.84	11.76	23.20	34.80
2 x 45mm	SDW22338-R50E	8.88	13.32	24.88	37.32
2 x 75mm	SDW22500-R50E	9.76	14.64	30.48	45.72
2 x 89mm	SDW22634-R50E	9.76	14.64	30.48	45.72
3 x 38mm	SDW22438-R50E	6.54	9.81	17.70	26.55
3 x 45mm	SDW22500-R50E	6.72	10.08	18.42	27.63
4 x 38mm	SDW22600-R50E	6.03	9.04	16.61	24.92
4 x 45mm	SDW22634-R50E	5.97	8.96	16.37	24.56

C-C-UK-2023 ©2023 SIMPSON STRONG-TIE COMPANY INC.

Solid Flange I-Joists

Simpson Strong-Drive SDW® & ESCR screws can be used for the fast and effective connection of 2 or 3 ply I-Joists (with a minimum flange height of 45mm).

No. of Plies	Joist Width [mm]	References	How to Install	Safe Working Load per Screw [kN]	Design Resistance (R_d) per Screw [kN]
2	47	SDW22338-R50E	From 1 side	1.00	2.40
2	63	SDW22458-R50E	From 1 side	1.27	3.09
2	72	SDW22500-R50E	From 1 side	1.25	2.96
2	97	SDW22634-R50E	From 1 side	1.25	2.99
3	47	SDW22500-R50E	From 1 side	1.03	2.43
3	63	SDW22634-R50E	From 1 side	1.05	2.46
3	72	SDW22500-R50E	from both sides	0.97	2.29
3	72	ESCR8.0x200	From 1 side	0.73	1.77
3	97	ESCSR8.0x280	From 1 side	0.87	2.06
3	97	SDW22634-R50E	from both sides	0.79	1.86

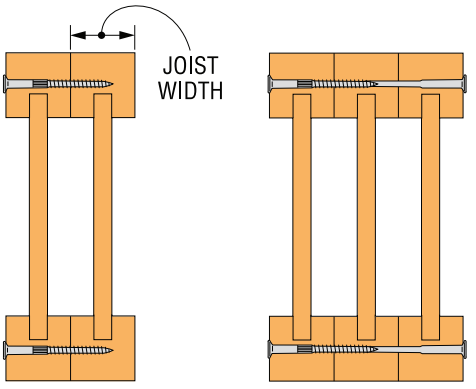

Screw installed from one side

Screw installed from both sides

Installation:

- No pre-drilling required.
- For best installation use a low speed drill.
- Install the screw head flush to the surface of the member being connected.
- Do not over-drive the screws.
- Install backer blocks on to both sides of the load carrying member only, when using face fix hangers that require backer block (see diagram below right).

Design and Detailing:

- It is common practice to facilitate handling of the multi-ply I-Joists to also install screws uniformly distributed along the length of the joist at centres not exceeding 600mm and a minimum distance of 400mm from each end.
- Gap between joists not to exceed 3mm.
- Floor sheathing to be attached to the top of both floor joists by nailing, screwing or gluing.
- The floor designer to ensure each joist is designed for the appropriate loads considering the location of the applied loads.
- For 2 ply trimmers / headers with supported hangers at less than 600mm centres - refer to SST technical department.

Backer block details for face fix hangers

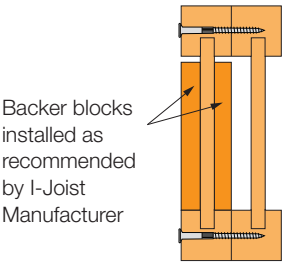

Note: For top flange hangers, including ITB enhanced, install backer blocks tight to the I-Joist top flange.

Screw spacing and distances when fixed from one side

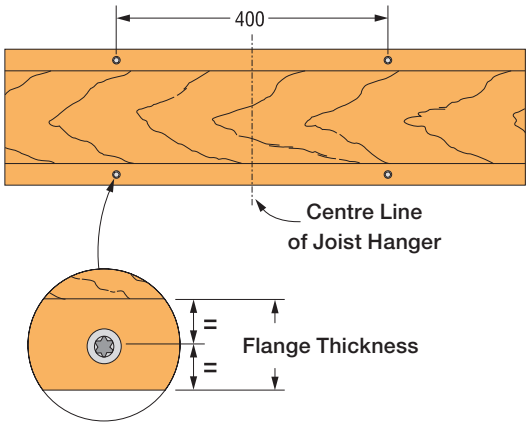

Screw spacing and distances when fixed from two sides

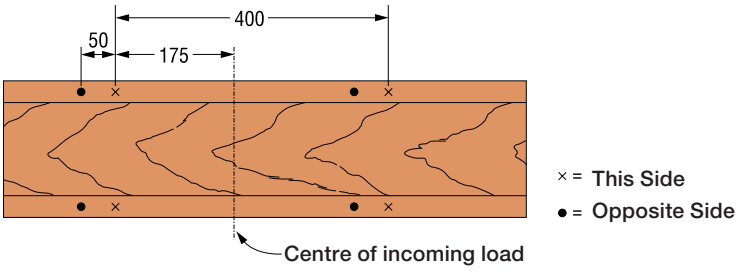

C-C-UK-2023 ©2023 SIMPSON STRONG-TIE COMPANY INC.

Metal Web Joists

Simpson Strong-Drive® SDW & ESCR screws can be used for a fast and effective connection of the multi-ply open web floor joists manufactured from metal webs and timber chords.

Joist Plys	References	How to Install	Safe Working Load Long Term Load [kN]	Characteristic Loads [kN]
2 x 72mm	SDW22500-R50E	From 1 side	1.59	3.76
2 x 97mm	SDW22634-R50E	From 1 side	1.66	3.93
2 x 122mm	SDW22634-R50E	From 1 side	1.07	2.53
1 x 147mm	ESCR8.0x200	From 1 side	1.74	4.13
3 x 72mm	ESCR8.0x200	From 1 side	0.97	2.29
3 x 97mm	ESCR8.0x280	From 1 side	0.81	1.83

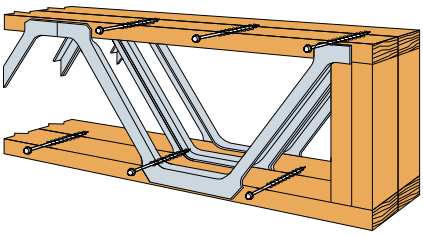

1. Loads are based on TR26 timbers with a minimum pointside penetration of 50mm.
2. Loads are per shear plane assuming single shear, timber-to-timber connections.

Load Transfer

Timber Plys	References	Max Safe Working Loads Long Term Load [kN]				Max Design Load [kN]			
		2 No. Screws	4 No. Screws	6 No. Screws	8 No. Screws	2 No. Screws	4 No. Screws	6 No. Screws	8 No. Screws
2 x 72mm	SDW22500-R50E	3.18	6.36	9.54	12.72	7.52	15.04	22.56	30.08
2 x 97mm	SDW22634-R50E	3.32	6.64	9.96	13.28	7.86	15.72	23.58	31.44
2 x 122mm	SDW22634-R50E	2.14	4.28	6.42	8.56	5.06	10.12	15.18	20.24
1 x 147mm	ESCR8.0x200	3.48	6.96	10.44	13.92	8.26	16.52	24.78	33.04
3 x 72mm	ESCR8.0x200	1.94	3.88	5.82	7.76	4.58	9.16	13.74	18.32
3 x 97mm	ESCR8.0x280	1.62	3.24	4.86	3.66	3.66	7.32	10.98	14.64

1. Maximum loads are based on screw capacity only, designer of floor to check joist capacity and ply sizes required to support the applied loads.
2. The above are examples of multi-ply combinations; other combinations can be used provided the minimum of 50mm pointside penetration is achieved into the last ply.
3. Joist designer to check capability of joists to take applied load.

Installation:

- No pre-drilling required.
- For best installation use a low speed drill.
- Install the screw head flush to the surface of the member being connected.
- Do not over-drive the screws.
- Screws are recommended for use in dry environments. Care should be taken during construction to prevent prolonged exposure to water or wet weather.
- Screw to be installed centrally in the depth of the flange (+/- 2.5mm) typically at 400mm centres about the centre of the joist hanger - see opposite.

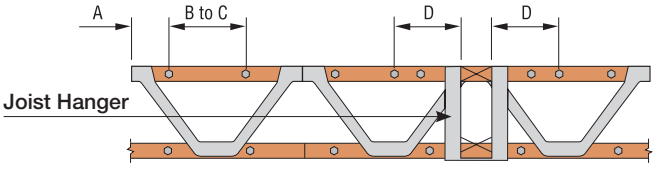

For A-D dimensions refer to the diagram above. Typical screw minimum spacing examples:

Install screws central to the chord height.

Screw Spacing Requirements [mm]		
A	Minimum End Distance	100
B	Minimum Spacing Along Chords	100
C	Maximum Spacing Along Chords	600
D	Maximum Distance Either Side of Concentrated Load	300

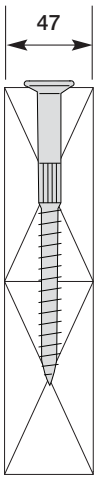

Design and Detailing:

- Flanges to be a minimum of 47mm deep.
- Screws shall be installed within 300mm of either side of a concentrated load, to be considered effective in transferring loads.
- It is common practice to facilitate handling of the multi-ply joist, to also include screws uniformly distributed along the length of the joist at centres not exceeding 600mm.
- Gap between joists not to exceed 3mm.
- If screws are installed in the wrong face of the joist then install additional screws in the correct face with a maximum spacing of twice the required spacing but not exceeding 600mm centres. The additional screws shall be offset from the existing screws to prevent splitting.
- Floor sheathing to be attached to the top of both floor joists by nailing, screwing or gluing.
- Floor designer to ensure each joist is designed for the appropriate loads considering the location of the applied loads.
- Do not install screws through the metal web plates unless approved by the joist manufacturer; pre-drilling would be required.
- Individual screw locations may be adjusted up to 75mm to avoid conflicts with other hardware or timber defects.

C-C-UK-2023 ©2023 SIMPSON STRONG-TIE COMPANY INC.

SFLH/SFLHI Safety Fast Lite Hanger

The SFLH/SFLHI is an innovative single piece hanger designed to support timber joists from masonry walls without the need for masonry above the course of blockwork supporting the hanger.

The SFLH/SFLHI has been designed to assist in meeting the air leakage requirements as part of the Code for Sustainable Homes. Since the joist is supported by a hanger and does not penetrate the inner leaf of blockwork, the potential for air leakage is reduced and avoids the time consuming and costly mortaring and sealing with mastic around built in joist ends.

This hanger allows construction work to continue safely just 3 days after the supporting blockwork has been laid - as opposed to 28 days in the case of traditional masonry hangers.

Material: Pre-galvanised mild steel.

STN RECOMMENDED FIXINGS

Performance Values

References	Joist Fasteners		Safe Working Loads [kN]			Characteristic Capacity [kN]		
			$R_{1,SWL}$			$R_{1,k}$		
	Qty	Type	2.8N/mm² Solid AAC	3.5N/mm² Solid AAC	7.0N/mm² Solid DAC	2.8N/mm² Solid AAC	3.5N/mm² Solid AAC	7.0N/mm² Solid DAC
SFLH/SFLHI	2	N3.75X30	3.9	4.5	4.5	6.8	7.9	7.9

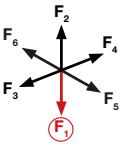

Features and Benefits

- Avoids joist penetrating block work, minimising air leakage.
- Achieves published performance values with no masonry above the supporting course of block work.
- Enables the construction of the floor deck prior to the next lift of masonry.
- Reduces health & safety risks associated with the use of traditional masonry hangers with no masonry courses above them.
- Eliminates the need for propping to support the floor joists.
- Web stiffeners are not required with joists to achieve published performance values.
- Use FMS strap range with every hanger spaced up to 600mm centres, to provide lateral restraint of the floor joist.

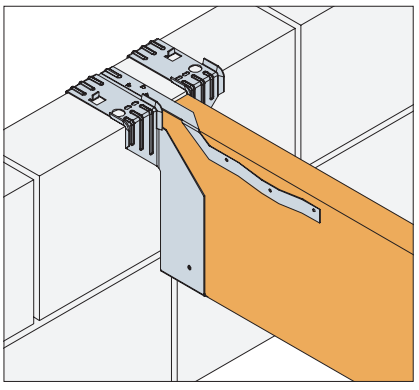

SFLH joist hanger used in conjunction with FMS strap. FMS to be ordered separately.

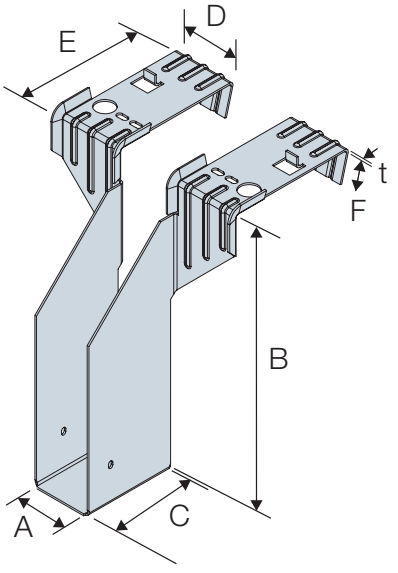

C-C-UK-2023 ©2023 SIMPSON STRONG-TIE COMPANY INC.

SFLH/SFLHI Safety Fast Lite Hanger

SIMPSON Strong-Tie

Product Dimensions

References	Dimensions [mm]							Joist Holes
	A	B	C	D	E	F	t	Ø4x6 Obround
SFLH100/38	38	100	75	50	103	25	1.5	2
SFLH125/38	38	125	75	50	103	25	1.5	2
SFLH150/38	38	140	75	50	103	25	1.5	2
SFLH175/38	38	165	75	50	103	25	1.5	2
SFLH200/38	38	190	75	50	103	25	1.5	2
SFLH225/38	38	215	75	50	103	25	1.5	2
SFLH250/38	38	240	75	50	103	25	1.5	2
SFLH300/38	38	290	75	50	103	25	1.5	2
SFLH100/44	44	100	75	50	103	25	1.5	2
SFLH125/44	44	125	75	50	103	25	1.5	2
SFLH150/44	44	140	75	50	103	25	1.5	2
SFLH175/44	44	165	75	50	103	25	1.5	2
SFLH200/44	44	190	75	50	103	25	1.5	2
SFLH225/44	44	215	75	50	103	25	1.5	2
SFLH250/44	44	240	75	50	103	25	1.5	2
SFLH300/44	44	290	75	50	103	25	1.5	2
SFLH100/47	47	100	75	50	103	25	1.5	2
SFLH125/47	47	125	75	50	103	25	1.5	2
SFLH150/47	47	140	75	50	103	25	1.5	2
SFLH175/47	47	165	75	50	103	25	1.5	2
SFLH200/47	47	190	75	50	103	25	1.5	2
SFLH225/47	47	215	75	50	103	25	1.5	2
SFLH250/47	47	240	75	50	103	25	1.5	2
SFLH300/47	47	290	75	50	103	25	1.5	2
SFLH100/50	50	100	75	50	103	25	1.5	2
SFLH125/50	50	125	75	50	103	25	1.5	2
SFLH150/50	50	140	75	50	103	25	1.5	2
SFLH175/50	50	165	75	50	103	25	1.5	2
SFLH200/50	50	190	75	50	103	25	1.5	2
SFLH225/50	50	215	75	50	103	25	1.5	2
SFLH250/50	50	240	75	50	103	25	1.5	2
SFLH300/50	50	290	75	50	103	25	1.5	2
SFLH100/63	63	100	75	50	103	25	1.5	2
SFLH125/63	63	125	75	50	103	25	1.5	2
SFLH150/63	63	140	75	50	103	25	1.5	2
SFLH175/63	63	165	75	50	103	25	1.5	2

References	Dimensions [mm]							Joist Holes
	A	B	C	D	E	F	t	Ø4x6 Obround
SFLH200/63	63	190	75	50	103	25	1.5	2
SFLH225/63	63	215	75	50	103	25	1.5	2
SFLH250/63	63	240	75	50	103	25	1.5	2
SFLH300/63	63	290	75	50	103	25	1.5	2
SFLH100/75	75	100	75	50	103	25	1.5	2
SFLH125/75	75	125	75	50	103	25	1.5	2
SFLH150/75	75	140	75	50	103	25	1.5	2
SFLH175/75	75	165	75	50	103	25	1.5	2
SFLH200/75	75	190	75	50	103	25	1.5	2
SFLH225/75	75	215	75	50	103	25	1.5	2
SFLH250/75	75	240	75	50	103	25	1.5	2
SFLH300/75	75	290	75	50	103	25	1.5	2
SFLH100/91	91	100	75	50	103	25	1.5	2
SFLH125/91	91	125	75	50	103	25	1.5	2
SFLH150/91	91	140	75	50	103	25	1.5	2
SFLH175/91	91	165	75	50	103	25	1.5	2
SFLH200/91	91	190	75	50	103	25	1.5	2
SFLH225/91	91	215	75	50	103	25	1.5	2
SFLH250/91	91	240	75	50	103	25	1.5	2
SFLH300/91	91	290	75	50	103	25	1.5	2
SFLH100/96	96	100	75	50	103	25	1.5	2
SFLH125/96	96	125	75	50	103	25	1.5	2
SFLH150/96	96	140	75	50	103	25	1.5	2
SFLH175/96	96	165	75	50	103	25	1.5	2
SFLH200/96	96	190	75	50	103	25	1.5	2
SFLH225/96	96	215	75	50	103	25	1.5	2
SFLH250/96	96	240	75	50	103	25	1.5	2
SFLH300/96	96	290	75	50	103	25	1.5	2
SFLH100/99	99	100	75	50	103	25	1.5	2
SFLH125/99	99	125	75	50	103	25	1.5	2
SFLH150/99	99	140	75	50	103	25	1.5	2
SFLH175/99	99	165	75	50	103	25	1.5	2
SFLH200/99	99	190	75	50	103	25	1.5	2
SFLH225/99	99	215	75	50	103	25	1.5	2
SFLH250/99	99	240	75	50	103	25	1.5	2
SFLH300/99	99	290	75	50	103	25	1.5	2

C-C-UK-2023 ©2023 SIMPSON STRONG-TIE COMPANY INC.

SFLH/SFLHI Safety Fast Lite Hanger

Product Dimensions

References	Dimensions [mm]							Joist Holes
	A	B	C	D	E	F	t	Ø4x6 Obround
SFLHI195/40	40	195	75	50	103	25	1.5	2
SFLHI200/40	40	200	75	50	103	25	1.5	2
SFLHI220/40	40	220	75	50	103	25	1.5	2
SFLHI225/40	40	225	75	50	103	25	1.5	2
SFLHI235/40	40	235	75	50	103	25	1.5	2
SFLHI240/40	40	240	75	50	103	25	1.5	2
SFLHI245/40	40	245	75	50	103	25	1.5	2
SFLHI300/40	40	300	75	50	103	25	1.5	2
SFLHI360/40	40	360	75	50	103	25	1.5	2
SFLHI400/40	40	400	75	50	103	25	1.5	2
SFLHI195/47	47	195	75	50	103	25	1.5	2
SFLHI200/47	47	200	75	50	103	25	1.5	2
SFLHI220/47	47	220	75	50	103	25	1.5	2
SFLHI225/47	47	225	75	50	103	25	1.5	2
SFLHI235/47	47	235	75	50	103	25	1.5	2
SFLHI240/47	47	240	75	50	103	25	1.5	2
SFLHI245/47	47	245	75	50	103	25	1.5	2
SFLHI253/47	47	253	75	50	103	25	1.5	2
SFLHI300/47	47	300	75	50	103	25	1.5	2
SFLHI350/47	47	350	75	50	103	25	1.5	2
SFLHI360/47	47	360	75	50	103	25	1.5	2
SFLHI400/47	47	400	75	50	103	25	1.5	2
SFLHI195/50	50	195	75	50	103	25	1.5	2
SFLHI220/50	50	220	75	50	103	25	1.5	2
SFLHI225/50	50	225	75	50	103	25	1.5	2
SFLHI235/50	50	235	75	50	103	25	1.5	2
SFLHI240/50	50	240	75	50	103	25	1.5	2
SFLHI245/50	50	245	75	50	103	25	1.5	2
SFLHI300/50	50	300	75	50	103	25	1.5	2
SFLHI220/56	56	220	75	50	103	25	1.5	2
SFLHI225/56	56	225	75	50	103	25	1.5	2
SFLHI240/56	56	240	75	50	103	25	1.5	2
SFLHI300/56	56	300	75	50	103	25	1.5	2
SFLHI200/61	61	200	75	50	103	25	1.5	2
SFLHI360/61	61	360	75	50	103	25	1.5	2
SFLHI400/61	61	400	75	50	103	25	1.5	2
SFLHI200/63	63	200	75	50	103	25	1.5	2
SFLHI220/63	63	220	75	50	103	25	1.5	2
SFLHI225/63	63	225	75	50	103	25	1.5	2
SFLHI240/63	63	240	75	50	103	25	1.5	2
SFLHI300/63	63	300	75	50	103	25	1.5	2
SFLHI350/63	63	350	75	50	103	25	1.5	2
SFLHI360/63	63	360	75	50	103	25	1.5	2
SFLHI400/63	63	400	75	50	103	25	1.5	2
SFLHI220/66	66	220	75	50	103	25	1.5	2
SFLHI225/66	66	225	75	50	103	25	1.5	2
SFLHI235/66	66	235	75	50	103	25	1.5	2
SFLHI240/66	66	240	75	50	103	25	1.5	2
SFLHI245/66	66	245	75	50	103	25	1.5	2
SFLHI300/66	66	300	75	50	103	25	1.5	2
SFLHI200/72	72	200	75	50	103	25	1.5	2
SFLHI220/72	72	220	75	50	103	25	1.5	2
SFLHI225/72	72	225	75	50	103	25	1.5	2
SFLHI240/72	72	240	75	50	103	25	1.5	2
SFLHI300/72	72	300	75	50	103	25	1.5	2
SFLHI360/72	72	360	75	50	103	25	1.5	2
SFLHI400/72	72	400	75	50	103	25	1.5	2
SFLHI195/75	75	195	75	50	103	25	1.5	2
SFLHI200/75	75	200	75	50	103	25	1.5	2

References	Dimensions [mm]							Joist Holes
	A	B	C	D	E	F	t	Ø4x6 Obround
SFLHI220/75	75	220	75	50	103	25	1.5	2
SFLHI225/75	75	225	75	50	103	25	1.5	2
SFLHI235/75	75	235	75	50	103	25	1.5	2
SFLHI240/75	75	240	75	50	103	25	1.5	2
SFLHI245/75	75	245	75	50	103	25	1.5	2
SFLHI253/75	75	253	75	50	103	25	1.5	2
SFLHI300/75	75	300	75	50	103	25	1.5	2
SFLHI304/75	75	304	75	50	103	25	1.5	2
SFLHI350/75	75	350	75	50	103	25	1.5	2
SFLHI360/75	75	360	75	50	103	25	1.5	2
SFLHI373/75	75	373	75	50	103	25	1.5	2
SFLHI400/75	75	400	75	50	103	25	1.5	2
SFLHI417/75	75	417	75	50	103	25	1.5	2
SFLHI421/75	75	421	75	50	103	25	1.5	2
SFLHI195/78	78	195	75	50	103	25	1.5	2
SFLHI200/78	78	200	75	50	103	25	1.5	2
SFLHI220/78	78	220	75	50	103	25	1.5	2
SFLHI225/78	78	225	75	50	103	25	1.5	2
SFLHI235/78	78	235	75	50	103	25	1.5	2
SFLHI240/78	78	240	75	50	103	25	1.5	2
SFLHI245/78	78	245	75	50	103	25	1.5	2
SFLHI300/78	78	300	75	50	103	25	1.5	2
SFLHI360/78	78	360	75	50	103	25	1.5	2
SFLHI400/78	78	400	75	50	103	25	1.5	2
SFLHI195/91	91	195	75	50	103	25	1.5	2
SFLHI200/91	91	200	75	50	103	25	1.5	2
SFLHI220/91	91	220	75	50	103	25	1.5	2
SFLHI225/91	91	225	75	50	103	25	1.5	2
SFLHI235/91	91	235	75	50	103	25	1.5	2
SFLHI240/91	91	240	75	50	103	25	1.5	2
SFLHI245/91	91	245	75	50	103	25	1.5	2
SFLHI253/91	91	253	75	50	103	25	1.5	2
SFLHI300/91	91	300	75	50	103	25	1.5	2
SFLHI350/91	91	350	75	50	103	25	1.5	2
SFLHI360/91	91	360	75	50	103	25	1.5	2
SFLHI400/91	91	400	75	50	103	25	1.5	2
SFLHI195/96	96	195	75	50	103	25	1.5	2
SFLHI220/96	96	220	75	50	103	25	1.5	2
SFLHI225/96	96	225	75	50	103	25	1.5	2
SFLHI235/96	96	235	75	50	103	25	1.5	2
SFLHI240/96	96	240	75	50	103	25	1.5	2
SFLHI245/96	96	245	75	50	103	25	1.5	2
SFLHI300/96	96	300	75	50	103	25	1.5	2
SFLHI195/99	99	195	75	50	103	25	1.5	2
SFLHI200/99	99	200	75	50	103	25	1.5	2
SFLHI220/99	99	220	75	50	103	25	1.5	2
SFLHI225/99	99	225	75	50	103	25	1.5	2
SFLHI235/99	99	235	75	50	103	25	1.5	2
SFLHI240/99	99	240	75	50	103	25	1.5	2
SFLHI245/99	99	245	75	50	103	25	1.5	2
SFLHI253/99	99	253	75	50	103	25	1.5	2
SFLHI300/99	99	300	75	50	103	25	1.5	2
SFLHI304/99	99	304	75	50	103	25	1.5	2
SFLHI350/99	99	350	75	50	103	25	1.5	2
SFLHI373/99	99	373	75	50	103	25	1.5	2
SFLHI400/99	99	400	75	50	103	25	1.5	2
SFLHI417/99	99	417	75	50	103	25	1.5	2
SFLHI421/99	99	421	75	50	103	25	1.5	2

C-C-UK-2023 ©2023 SIMPSON STRONG-TIE COMPANY INC.

SFLH/SFLHI Safety Fast Lite Hanger

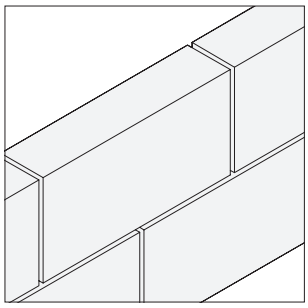

Step 1: Build masonry to the required level, ensuring any coursing bricks or blocks are at least one course below the supporting block.

Leave the masonry to cure for at least three days.

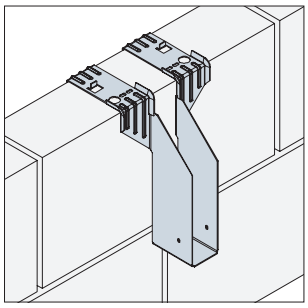

Step 2: Place the Safety Fast Lite Masonry Hanger for I-Joists (SFLHI) over the inner leaf of the block work, ensuring the top flanges are fully bearing onto the top of the supporting block work and are also tight against the front face of the block work.

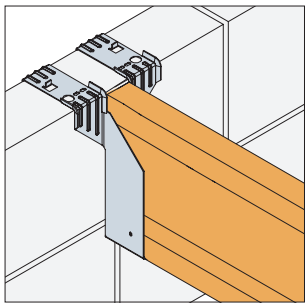

Step 3: Install the floor joist into the SFLHI. The end of the joist should be tight against the back of the hanger. Maximum gap allowed: 6mm.

Install the specified joist nails as specified in the item tables included in this section.

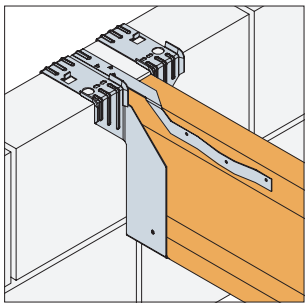

Step 4: Install the appropriate restraint strap (see installation notes for SFH/SFHI), ensuring the strap is tight against the back face of the block work hanger return and the side of the floor joist. Fix with 3 No 3.75x30mm square twist nails.

Working on the floor prior to the next lift of masonry.

1. The floor decking may be stored on the joists provided the load is uniformly distributed among several joists and does not exceed the hanger or joist capacities. Refer to joist manufacturer or supplier for joist capacity and maximum construction loads.

2. The floor decking must be securely attached to each joist before additional loads can be placed on the system.

3. Pallets of blocks or other construction material should be placed onto the scaffolding and not directly onto the floor. The materials can then be evenly distributed around the floor manually, ensuring the hanger or joist capacities are not exceeded.

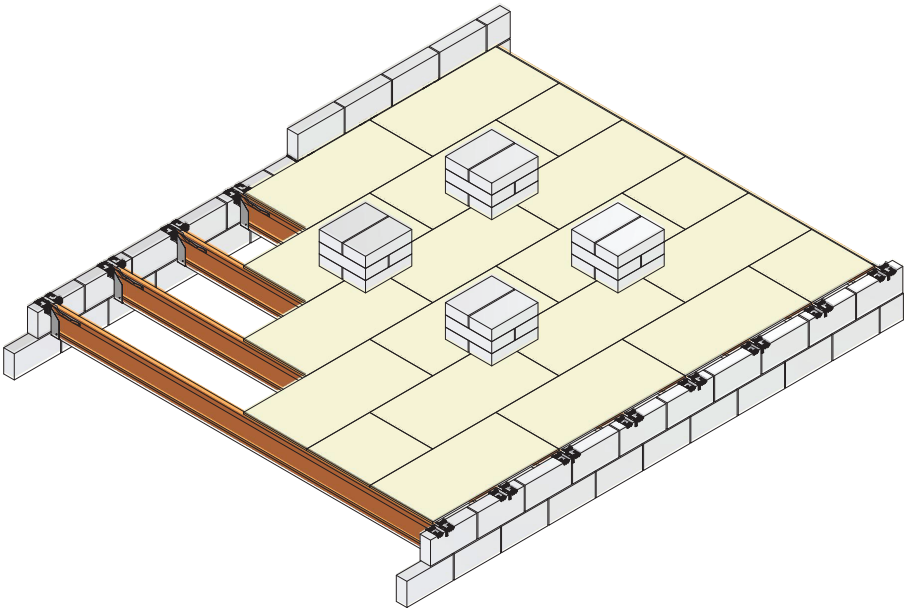

For example, total number of blocks per pair of joists (4 hangers) @ 600 c/c:

- 2.8N/mm2 AAC = 24
- 3.5N/mm2 AAC = 20
- 7.0N/mm2 DAC = 16

Note: I-Joist shown above for illustration purposes, SFLH is compatible with solid sawn joists.

C-C-UK-2023 ©2023 SIMPSON STRONG-TIE COMPANY INC.

SFH/SFHI/SFWH/SFWHI Safety Fast Masonry Restraint Hangers

The Safety Fast Hangers are designed to support timber joists, beams and trussed rafters from masonry walls without the need for masonry above the top flange.

- Requires no masonry above the top flange to achieve the published performance values.
- Improved vertical and lateral load distribution.
- Mini Strap simply hooks onto the hanger.
- Enables the construction of the floor deck prior to the next lift of masonry.
- Reduces Health & Safety risks associated with the use of the traditional masonry hangers with no masonry above.
- Eliminates the need for propping of floor joists.
- Mini Strap provides lateral restraint in accordance with NHBC guidelines.
- Allows for retrofit of lateral restraint straps.

Material:
SFH/SFHI: Pre-galvanised mild steel.
SFWH/SFWHI: Hot-dip galvanised mild steel.
Mini Strap: Pre-galvanised mild steel.

Installation:

- Build masonry to required level, ensuring any coursing bricks or blocks are at least one course below the supporting block, and leave to cure.
- Place the Safety Fast Restraint Hanger over the inner leaf of block work, ensuring the bearing plate is fully located onto the top of the masonry, sitting tight against the front face and top of the block work.
- Sit the floor joist into the masonry hanger and ensure all joists are correctly installed. The joist should be tight into the back of the hanger. The maximum gap between the back of the hanger and the end of the joist is 6mm; Use specified nails.
- Clip the Safety Fast Mini Strap onto the restraining hooks on either side of the hanger and nail to the side face of the joist with 3.75 x 30mm square twist nails. INSTALL ONLY ONE STRAP PER HANGER.

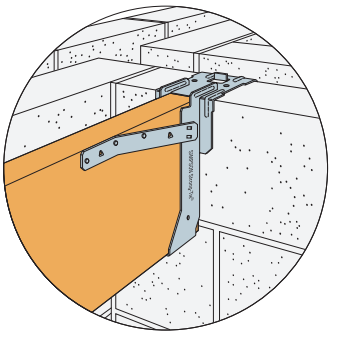

Typical SFH Installation

General Installation Notes

- The floor decking may be stored on the joists provided the load is uniformly distributed between the several joists and does not exceed the hanger or joist capacities. Refer to joist manufacturer or supplier for joist capacity and maximum construction loads.
- The floor decking must be securely attached to each joist before additional loads can be placed on the system.
- Floor decking and block work is to be cut where necessary to fit around the upstand stiffeners.
- Pallets of blocks or other construction materials should be placed onto the scaffolding and NOT directly onto the floor. The materials can then be evenly distributed around the floor manually, ensuring hanger or joist capacities are not exceeded.

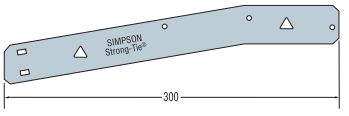

Mini Strap (Included with Safety Fast Hanger)

Performance Values

References	A	Joist Fasteners		Mini Strap Fasteners		Safe Working Loads [kN]			Characteristic Capacities [kN]	
						$R_{1,SWL}$			$R_{1,k}$	
		Qty	Type	Qty	Type	2.8N/mm² Solid AAC	3.5N/mm² Solid AAC	7.0N/mm² Solid DAC	3.5N/mm² Solid AAC	7.0N/mm² Solid DAC
SFH/SFHI	≤ 61	2	N3.75x30	3	N3.75 x 30	5.3	6.7	6.7	13.3	13.3
	> 61	2	N3.75x30	3	N3.75 x 30	10.0	12.5	12.5	24.9	24.9

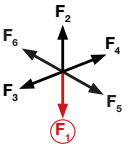

Performance Values

References	A	Joist Fasteners		Mini Strap Fasteners		Safe Working Loads [kN]			Characteristic Capacities [kN]	
						$R_{1,SWL}$			$R_{1,k}$	
		Qty	Type	Qty	Type	2.8N/mm² Solid AAC	3.5N/mm² Solid AAC	7.0N/mm² Solid DAC	3.5N/mm² Solid AAC	7.0N/mm² Solid DAC
SFWH/SFWHI	≤ 63	2	N3.75x30	3	N3.75 x 30	7.4	9.3	9.3	18.6	18.6
	> 63	2	N3.75x30	3	N3.75 x 30	11.6	14.5	14.5	28.9	28.9

C-C-UK-2023 ©2023 SIMPSON STRONG-TIE COMPANY INC.

SFH/SFHI/SFWH/SFWHI Safety Fast Masonry Restraint Hangers

Product Dimensions

References	Dimensions [mm]								Joist Holes	
	A	B	C	D	E	F	G	t	Ø4x6 Obround	Mini Strap Ø4.1
SFH150/40/100	40	140	64	100	103	75	45	2.5	2	3
SFH175/40/100	40	165	64	100	103	75	45	2.5	2	3
SFH200/40/100	40	190	64	100	103	75	45	2.5	2	3
SFH225/40/100	40	215	64	100	103	75	45	2.5	2	3
SFH250/40/100	40	240	64	100	103	75	45	2.5	2	3
SFH300/40/100	40	290	64	100	103	75	45	2.5	2	3
SFH150/47/100	47	140	64	100	103	75	45	2.5	2	3
SFH175/47/100	47	165	64	100	103	75	45	2.5	2	3
SFH200/47/100	47	190	64	100	103	75	45	2.5	2	3
SFH225/47/100	47	215	64	100	103	75	45	2.5	2	3
SFH250/47/100	47	240	64	100	103	75	45	2.5	2	3
SFH300/47/100	47	290	64	100	103	75	45	2.5	2	3
SFH150/50/100	50	140	64	100	103	75	45	2.5	2	3
SFH175/50/100	50	165	64	100	103	75	45	2.5	2	3
SFH200/50/100	50	190	64	100	103	75	45	2.5	2	3
SFH225/50/100	50	215	64	100	103	75	45	2.5	2	3
SFH250/50/100	50	240	64	100	103	75	45	2.5	2	3
SFH300/50/100	50	290	64	100	103	75	45	2.5	2	3
SFH150/75/100	75	140	64	200	103	75	45	2.5	2	3
SFH175/75/100	75	165	64	200	103	75	45	2.5	2	3
SFH200/75/100	75	190	64	200	103	75	45	2.5	2	3
SFH225/75/100	75	215	64	200	103	75	45	2.5	2	3
SFH250/75/100	75	240	64	200	103	75	45	2.5	2	3
SFH300/75/100	75	290	64	200	103	75	45	2.5	2	3
SFH150/91/100	91	140	64	200	103	75	45	2.5	2	3
SFH175/91/100	91	165	64	200	103	75	45	2.5	2	3
SFH200/91/100	91	190	64	200	103	75	45	2.5	2	3
SFH225/91/100	91	215	64	200	103	75	45	2.5	2	3
SFH250/91/100	91	240	64	200	103	75	45	2.5	2	3
SFH300/91/100	91	290	64	200	103	75	45	2.5	2	3
SFH150/96/100	96	140	64	200	103	75	45	2.5	2	3
SFH175/96/100	96	165	64	200	103	75	45	2.5	2	3
SFH200/96/100	96	190	64	200	103	75	45	2.5	2	3
SFH225/96/100	96	215	64	200	103	75	45	2.5	2	3
SFH250/96/100	96	240	64	200	103	75	45	2.5	2	3
SFH300/96/100	96	290	64	200	103	75	45	2.5	2	3
SFH150/99/100	99	140	64	200	103	75	45	2.5	2	3
SFH175/99/100	99	165	64	200	103	75	45	2.5	2	3
SFH200/99/100	99	190	64	200	103	75	45	2.5	2	3
SFH225/99/100	99	215	64	200	103	75	45	2.5	2	3
SFH250/99/100	99	240	64	200	103	75	45	2.5	2	3
SFH300/99/100	99	290	64	200	103	75	45	2.5	2	3

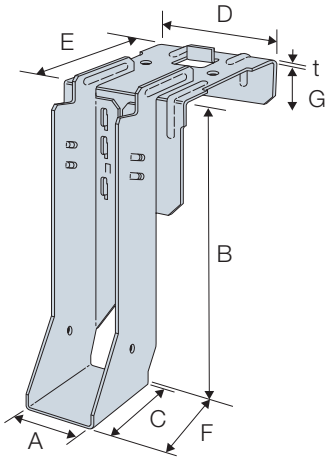

SFH

C-C-UK-2023 ©2023 SIMPSON STRONG-TIE COMPANY INC.

SFH/SFHI/SFWH/SFWHI Safety Fast Masonry Restraint Hangers

Product Dimensions

References	Dimensions [mm]								Joist Holes	
	A	B	C	D	E	F	G	t	Ø4x6 Obround	Mini Strap Ø4.1
SFHI195/40/100	40	195	64	100	103	75	45	2.5	2	3
SFHI200/40/100	40	200	64	100	103	75	45	2.5	2	3
SFHI220/40/100	40	220	64	100	103	75	45	2.5	2	3
SFHI225/40/100	40	225	64	100	103	75	45	2.5	2	3
SFHI235/40/100	40	235	64	100	103	75	45	2.5	2	3
SFHI240/40/100	40	240	64	100	103	75	45	2.5	2	3
SFHI245/40/100	40	245	64	100	103	75	45	2.5	2	3
SFHI300/40/100	40	300	64	100	103	75	45	2.5	2	3
SFHI360/40/100	40	360	64	100	103	75	45	2.5	2	3
SFHI400/40/100	40	400	64	100	103	75	45	2.5	2	3
SFHI195/47/100	47	195	64	100	103	75	45	2.5	2	3
SFHI200/47/100	47	200	64	100	103	75	45	2.5	2	3
SFHI220/47/100	47	220	64	100	103	75	45	2.5	2	3
SFHI225/47/100	47	225	64	100	103	75	45	2.5	2	3
SFHI235/47/100	47	235	64	100	103	75	45	2.5	2	3
SFHI240/47/100	47	240	64	100	103	75	45	2.5	2	3
SFHI245/47/100	47	245	64	100	103	75	45	2.5	2	3
SFHI253/47/100	47	253	64	100	103	75	45	2.5	2	3
SFHI300/47/100	47	300	64	100	103	75	45	2.5	2	3
SFHI350/47/100	47	350	64	100	103	75	45	2.5	2	3
SFHI360/47/100	47	360	64	100	103	75	45	2.5	2	3
SFHI400/47/100	47	400	64	100	103	75	45	2.5	2	3
SFHI195/50/100	50	195	64	100	103	75	45	2.5	2	3
SFHI220/50/100	50	220	64	100	103	75	45	2.5	2	3
SFHI225/50/100	50	225	64	100	103	75	45	2.5	2	3
SFHI235/50/100	50	235	64	100	103	75	45	2.5	2	3
SFHI240/50/100	50	240	64	100	103	75	45	2.5	2	3
SFHI245/50/100	50	245	64	100	103	75	45	2.5	2	3
SFHI300/50/100	50	300	64	100	103	75	45	2.5	2	3
SFHI200/61/100	61	200	64	100	103	75	45	2.5	2	3
SFHI360/61/100	61	360	64	100	103	75	45	2.5	2	3
SFHI400/61/100	61	400	64	100	103	75	45	2.5	2	3
SFHI220/66/100	66	220	64	200	103	75	45	2.5	2	3
SFHI225/66/100	66	225	64	200	103	75	45	2.5	2	3
SFHI235/66/100	66	235	64	200	103	75	45	2.5	2	3
SFHI240/66/100	66	240	64	200	103	75	45	2.5	2	3
SFHI245/66/100	66	245	64	200	103	75	45	2.5	2	3
SFHI300/66/100	66	300	64	200	103	75	45	2.5	2	3
SFHI200/72/100	72	200	64	200	103	75	45	2.5	2	3
SFHI220/72/100	72	220	64	200	103	75	45	2.5	2	3
SFHI225/72/100	72	225	64	200	103	75	45	2.5	2	3
SFHI240/72/100	72	240	64	200	103	75	45	2.5	2	3
SFHI300/72/100	72	300	64	200	103	75	45	2.5	2	3
SFHI360/72/100	72	360	64	200	103	75	45	2.5	2	3
SFHI400/72/100	72	400	64	200	103	75	45	2.5	2	3

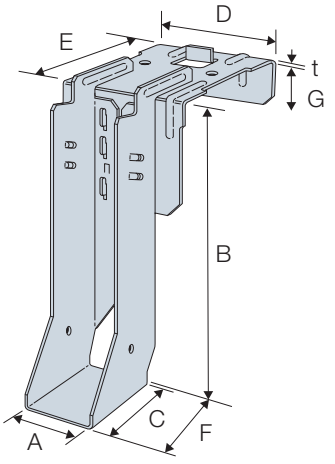

SFHI

C-C-UK-2023 ©2023 SIMPSON STRONG-TIE COMPANY INC.

SFH/SFHI/SFWH/SFWHI Safety Fast Masonry Restraint Hangers

Product Dimensions

References	Dimensions [mm]								Joist Holes	
	A	B	C	D	E	F	G	t	Ø4x6 Obround	Mini Strap Ø4.1
SFHI195/75/100	75	195	64	200	103	75	45	2.5	2	3
SFHI200/75/100	75	200	64	200	103	75	45	2.5	2	3
SFHI220/75/100	75	220	64	200	103	75	45	2.5	2	3
SFHI225/75/100	75	225	64	200	103	75	45	2.5	2	3
SFHI235/75/100	75	235	64	200	103	75	45	2.5	2	3
SFHI240/75/100	75	240	64	200	103	75	45	2.5	2	3
SFHI245/75/100	75	245	64	200	103	75	45	2.5	2	3
SFHI253/75/100	75	253	64	200	103	75	45	2.5	2	3
SFHI300/75/100	75	300	64	200	103	75	45	2.5	2	3
SFHI304/75/100	75	304	64	200	103	75	45	2.5	2	3
SFHI350/75/100	75	350	64	200	103	75	45	2.5	2	3
SFHI360/75/100	75	360	64	200	103	75	45	2.5	2	3
SFHI373/75/100	75	373	64	200	103	75	45	2.5	2	3
SFHI400/75/100	75	400	64	200	103	75	45	2.5	2	3
SFHI417/75/100	75	417	64	200	103	75	45	2.5	2	3
SFHI421/75/100	75	421	64	200	103	75	45	2.5	2	3
SFHI195/78/100	78	195	64	200	103	75	45	2.5	2	3
SFHI200/78/100	78	200	64	200	103	75	45	2.5	2	3
SFHI220/78/100	78	220	64	200	103	75	45	2.5	2	3
SFHI225/78/100	78	225	64	200	103	75	45	2.5	2	3
SFHI235/78/100	78	235	64	200	103	75	45	2.5	2	3
SFHI240/78/100	78	240	64	200	103	75	45	2.5	2	3
SFHI245/78/100	78	245	64	200	103	75	45	2.5	2	3
SFHI300/78/100	78	300	64	200	103	75	45	2.5	2	3
SFHI360/78/100	78	360	64	200	103	75	45	2.5	2	3
SFHI400/78/100	78	400	64	200	103	75	45	2.5	2	3
SFHI195/91/100	91	195	64	200	103	75	45	2.5	2	3
SFHI200/91/100	91	200	64	200	103	75	45	2.5	2	3
SFHI220/91/100	91	220	64	200	103	75	45	2.5	2	3
SFHI225/91/100	91	225	64	200	103	75	45	2.5	2	3
SFHI235/91/100	91	235	64	200	103	75	45	2.5	2	3
SFHI240/91/100	91	240	64	200	103	75	45	2.5	2	3
SFHI245/91/100	91	245	64	200	103	75	45	2.5	2	3
SFHI253/91/100	91	253	64	200	103	75	45	2.5	2	3
SFHI300/91/100	91	300	64	200	103	75	45	2.5	2	3
SFHI350/91/100	91	350	64	200	103	75	45	2.5	2	3
SFHI360/91/100	91	360	64	200	103	75	45	2.5	2	3
SFHI400/91/100	91	400	64	200	103	75	45	2.5	2	3
SFHI195/96/100	96	195	64	200	103	75	45	2.5	2	3
SFHI220/96/100	96	220	64	200	103	75	45	2.5	2	3
SFHI225/96/100	96	225	64	200	103	75	45	2.5	2	3
SFHI235/96/100	96	235	64	200	103	75	45	2.5	2	3
SFHI240/96/100	96	240	64	200	103	75	45	2.5	2	3
SFHI245/96/100	96	245	64	200	103	75	45	2.5	2	3
SFHI300/96/100	96	300	64	200	103	75	45	2.5	2	3
SFHI195/99/100	99	195	64	200	103	75	45	2.5	2	3
SFHI200/99/100	99	200	64	200	103	75	45	2.5	2	3
SFHI220/99/100	99	220	64	200	103	75	45	2.5	2	3
SFHI225/99/100	99	225	64	200	103	75	45	2.5	2	3
SFHI235/99/100	99	235	64	200	103	75	45	2.5	2	3
SFHI240/99/100	99	240	64	200	103	75	45	2.5	2	3
SFHI245/99/100	99	245	64	200	103	75	45	2.5	2	3
SFHI253/99/100	99	253	64	200	103	75	45	2.5	2	3
SFHI300/99/100	99	300	64	200	103	75	45	2.5	2	3
SFHI304/99/100	99	304	64	200	103	75	45	2.5	2	3
SFHI350/99/100	99	350	64	200	103	75	45	2.5	2	3
SFHI373/99/100	99	373	64	200	103	75	45	2.5	2	3
SFHI400/99/100	99	400	64	200	103	75	45	2.5	2	3
SFHI417/99/100	99	417	64	200	103	75	45	2.5	2	3
SFHI421/99/100	99	421	64	200	103	75	45	2.5	2	3

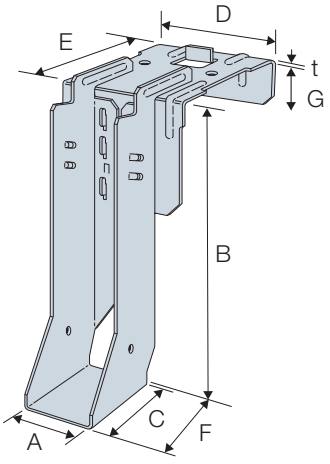

SFHI

C-C-UK-2023 ©2023 SIMPSON STRONG-TIE COMPANY INC.

SFH/SFHI/SFWH/SFWHI Safety Fast Masonry Restraint Hangers

Product Dimensions

References	Dimensions [mm]								Joist Holes		
	A	B	C	D	E	F	G	t	Ø4x6 Obround	Ø4.1	Mini Strap Ø4.1
SFWH225/38/100	38	215	64	200	103	75	45	2.5	2	2	3
SFWH225/44/100	44	215	64	200	103	75	45	2.5	2	2	3
SFWH250/44/100	44	240	64	200	103	75	45	2.5	2	2	3
SFWH100/47/100	47	100	64	200	103	75	45	2.5	2	2	3
SFWH125/47/100	47	125	64	200	103	75	45	2.5	2	2	3
SFWH150/47/100	47	140	64	200	103	75	45	2.5	2	2	3
SFWH175/47/100	47	165	64	200	103	75	45	2.5	2	2	3
SFWH200/47/100	47	190	64	200	103	75	45	2.5	2	2	3
SFWH225/47/100	47	215	64	200	103	75	45	2.5	2	2	3
SFWH250/47/100	47	240	64	200	103	75	45	2.5	2	2	3
SFWH300/47/100	47	290	64	200	103	75	45	2.5	2	2	3
SFWH100/50/100	50	100	64	200	103	75	45	2.5	2	2	3
SFWH125/50/100	50	125	64	200	103	75	45	2.5	2	2	3
SFWH150/50/100	50	140	64	200	103	75	45	2.5	2	2	3
SFWH175/50/100	50	165	64	200	103	75	45	2.5	2	2	3
SFWH200/50/100	50	190	64	200	103	75	45	2.5	2	2	3
SFWH225/50/100	50	215	64	200	103	75	45	2.5	2	2	3
SFWH250/50/100	50	240	64	200	103	75	45	2.5	2	2	3
SFWH300/50/100	50	290	64	200	103	75	45	2.5	2	2	3
SFWH100/75/100	75	100	64	200	103	75	45	2.5	2	2	3
SFWH125/75/100	75	125	64	200	103	75	45	2.5	2	2	3
SFWH150/75/100	75	140	64	200	103	75	45	2.5	2	2	3
SFWH175/75/100	75	165	64	200	103	75	45	2.5	2	2	3
SFWH200/75/100	75	190	64	200	103	75	45	2.5	2	2	3
SFWH225/75/100	75	215	64	200	103	75	45	2.5	2	2	3
SFWH250/75/100	75	240	64	200	103	75	45	2.5	2	2	3
SFWH300/75/100	75	290	64	200	103	75	45	2.5	2	2	3
SFWH100/91/100	91	100	64	200	103	75	45	2.5	2	2	3
SFWH125/91/100	91	125	64	200	103	75	45	2.5	2	2	3
SFWH150/91/100	91	140	64	200	103	75	45	2.5	2	2	3
SFWH175/91/100	91	165	64	200	103	75	45	2.5	2	2	3
SFWH200/91/100	91	190	64	200	103	75	45	2.5	2	2	3
SFWH225/91/100	91	215	64	200	103	75	45	2.5	2	2	3
SFWH250/91/100	91	240	64	200	103	75	45	2.5	2	2	3
SFWH300/91/100	91	290	64	200	103	75	45	2.5	2	2	3
SFWH100/99/100	99	100	64	200	103	75	45	2.5	2	2	3
SFWH125/99/100	99	125	64	200	103	75	45	2.5	2	2	3
SFWH150/99/100	99	140	64	200	103	75	45	2.5	2	2	3
SFWH175/99/100	99	165	64	200	103	75	45	2.5	2	2	3
SFWH200/99/100	99	190	64	200	103	75	45	2.5	2	2	3
SFWH225/99/100	99	215	64	200	103	75	45	2.5	2	2	3
SFWH250/99/100	99	240	64	200	103	75	45	2.5	2	2	3
SFWH300/99/100	99	290	64	200	103	75	45	2.5	2	2	3
SFWH100/116/100	116	100	64	200	103	75	45	2.5	2	2	3
SFWH125/116/100	116	125	64	200	103	75	45	2.5	2	2	3
SFWH150/116/100	116	140	64	200	103	75	45	2.5	2	2	3

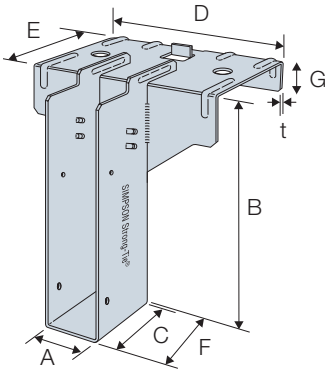

SFWH

C-C-UK-2023 ©2023 SIMPSON STRONG-TIE COMPANY INC.

SFH/SFHI/SFWH/SFWHI Safety Fast Masonry Restraint Hangers

Product Dimensions

References	Dimensions [mm]								Joist Holes		
	A	B	C	D	E	F	G	t	Ø4x6 Obround	Ø4.1	Mini Strap Ø4.1
SFWH175/125/100	125	165	64	275	103	75	45	2.5	2	2	3
SFWH200/125/100	125	190	64	275	103	75	45	2.5	2	2	3
SFWH225/125/100	125	215	64	275	103	75	45	2.5	2	2	3
SFWH250/125/100	125	240	64	275	103	75	45	2.5	2	2	3
SFWH300/125/100	125	290	64	275	103	75	45	2.5	2	2	3
SFWH100/135/100	135	100	64	275	103	75	45	2.5	2	2	3
SFWH125/135/100	135	125	64	275	103	75	45	2.5	2	2	3
SFWH150/135/100	135	140	64	275	103	75	45	2.5	2	2	3
SFWH175/135/100	135	165	64	275	103	75	45	2.5	2	2	3
SFWH200/135/100	135	190	64	275	103	75	45	2.5	2	2	3
SFWH225/135/100	135	215	64	275	103	75	45	2.5	2	2	3
SFWH250/135/100	135	240	64	275	103	75	45	2.5	2	2	3
SFWH300/135/100	135	290	64	275	103	75	45	2.5	2	2	3
SFWH100/150/100	150	100	64	275	103	75	45	2.5	2	2	3
SFWH125/150/100	150	125	64	275	103	75	45	2.5	2	2	3
SFWH150/150/100	150	140	64	275	103	75	45	2.5	2	2	3
SFWH175/150/100	150	165	64	275	103	75	45	2.5	2	2	3
SFWH200/150/100	150	190	64	275	103	75	45	2.5	2	2	3
SFWH225/150/100	150	215	64	275	103	75	45	2.5	2	2	3
SFWH250/150/100	150	240	64	275	103	75	45	2.5	2	2	3
SFWH300/150/100	150	290	64	275	103	75	45	2.5	2	2	3
SFWH100/180/100	180	100	64	275	103	75	45	2.5	2	2	3
SFWH100/200/100	200	100	64	275	103	75	45	2.5	2	2	3
SFWH125/200/100	200	125	64	275	103	75	45	2.5	2	2	3
SFWH150/200/100	200	140	64	275	103	75	45	2.5	2	2	3
SFWH175/200/100	200	165	64	275	103	75	45	2.5	2	2	3
SFWH200/200/100	200	190	64	275	103	75	45	2.5	2	2	3
SFWH225/200/100	200	215	64	275	103	75	45	2.5	2	2	3
SFWH250/200/100	200	240	64	275	103	75	45	2.5	2	2	3
SFWH300/200/100	200	290	64	275	103	75	45	2.5	2	2	3

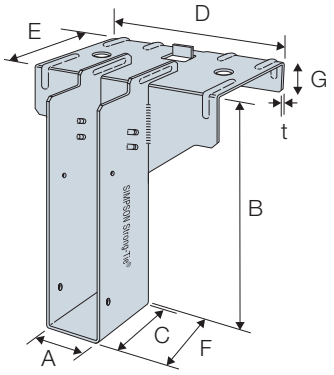

SFWH

C-C-UK-2023 ©2023 SIMPSON STRONG-TIE COMPANY INC.

SFH/SFHI/SFWH/SFWHI Safety Fast Masonry Restraint Hangers

Product Dimensions

References	Dimensions [mm]								Joist Holes		
	A	B	C	D	E	F	G	t	Ø4x6 Obround	Ø4.1	Mini Strap Ø4.1
SFWHI195/40/100	40	195	64	200	103	75	45	2.5	2	2	3
SFWHI200/40/100	40	200	64	200	103	75	45	2.5	2	2	3
SFWHI220/40/100	40	220	64	200	103	75	45	2.5	2	2	3
SFWHI225/40/100	40	225	64	200	103	75	45	2.5	2	2	3
SFWHI235/40/100	40	235	64	200	103	75	45	2.5	2	2	3
SFWHI240/40/100	40	240	64	200	103	75	45	2.5	2	2	3
SFWHI245/40/100	40	245	64	200	103	75	45	2.5	2	2	3
SFWHI300/40/100	40	300	64	200	103	75	45	2.5	2	2	3
SFWHI360/40/100	40	360	64	200	103	75	45	2.5	2	2	3
SFWHI400/40/100	40	400	64	200	103	75	45	2.5	2	2	3
SFWHI195/47/100	47	195	64	200	103	75	45	2.5	2	2	3
SFWHI200/47/100	47	200	64	200	103	75	45	2.5	2	2	3
SFWHI220/47/100	47	220	64	200	103	75	45	2.5	2	2	3
SFWHI225/47/100	47	225	64	200	103	75	45	2.5	2	2	3
SFWHI235/47/100	47	235	64	200	103	75	45	2.5	2	2	3
SFWHI240/47/100	47	240	64	200	103	75	45	2.5	2	2	3
SFWHI245/47/100	47	245	64	200	103	75	45	2.5	2	2	3
SFWHI253/47/100	47	253	64	200	103	75	45	2.5	2	2	3
SFWHI300/47/100	47	300	64	200	103	75	45	2.5	2	2	3
SFWHI350/47/100	47	350	64	200	103	75	45	2.5	2	2	3
SFWHI360/47/100	47	360	64	200	103	75	45	2.5	2	2	3
SFWHI400/47/100	47	400	64	200	103	75	45	2.5	2	2	3
SFWHI195/50/100	50	195	64	200	103	75	45	2.5	2	2	3
SFWHI220/50/100	50	220	64	200	103	75	45	2.5	2	2	3
SFWHI225/50/100	50	225	64	200	103	75	45	2.5	2	2	3
SFWHI235/50/100	50	235	64	200	103	75	45	2.5	2	2	3
SFWHI240/50/100	50	240	64	200	103	75	45	2.5	2	2	3
SFWHI245/50/100	50	245	64	200	103	75	45	2.5	2	2	3
SFWHI300/50/100	50	300	64	200	103	75	45	2.5	2	2	3
SFWHI220/56/100	56	220	64	200	103	75	45	2.5	2	2	3
SFWHI225/56/100	56	225	64	200	103	75	45	2.5	2	2	3
SFWHI240/56/100	56	240	64	200	103	75	45	2.5	2	2	3
SFWHI300/56/100	56	300	64	200	103	75	45	2.5	2	2	3
SFWHI200/61/100	61	200	64	200	103	75	45	2.5	2	2	3
SFWHI360/61/100	61	360	64	200	103	75	45	2.5	2	2	3
SFWHI400/61/100	61	400	64	200	103	75	45	2.5	2	2	3
SFWHI200/63/100	63	200	64	200	103	75	45	2.5	2	2	3
SFWHI220/63/100	63	220	64	200	103	75	45	2.5	2	2	3
SFWHI225/63/100	63	225	64	200	103	75	45	2.5	2	2	3
SFWHI240/63/100	63	240	64	200	103	75	45	2.5	2	2	3
SFWHI300/63/100	63	300	64	200	103	75	45	2.5	2	2	3
SFWHI350/63/100	63	350	64	200	103	75	45	2.5	2	2	3
SFWHI360/63/100	63	360	64	200	103	75	45	2.5	2	2	3
SFWHI400/63/100	63	400	64	200	103	75	45	2.5	2	2	3
SFWHI220/66/100	66	220	64	200	103	75	45	2.5	2	2	3
SFWHI225/66/100	66	225	64	200	103	75	45	2.5	2	2	3
SFWHI235/66/100	66	235	64	200	103	75	45	2.5	2	2	3
SFWHI240/66/100	66	240	64	200	103	75	45	2.5	2	2	3
SFWHI245/66/100	66	245	64	200	103	75	45	2.5	2	2	3
SFWHI300/66/100	66	300	64	200	103	75	45	2.5	2	2	3
SFWHI200/72/100	72	200	64	200	103	75	45	2.5	2	2	3
SFWHI220/72/100	72	220	64	200	103	75	45	2.5	2	2	3
SFWHI225/72/100	72	225	64	200	103	75	45	2.5	2	2	3
SFWHI240/72/100	72	240	64	200	103	75	45	2.5	2	2	3
SFWHI300/72/100	72	300	64	200	103	75	45	2.5	2	2	3
SFWHI360/72/100	72	360	64	200	103	75	45	2.5	2	2	3
SFWHI400/72/100	72	400	64	200	103	75	45	2.5	2	2	3

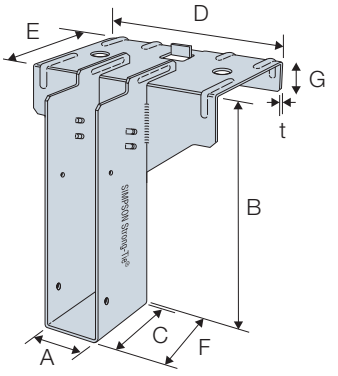

SFWHI

C-C-UK-2023 ©2023 SIMPSON STRONG-TIE COMPANY INC.

SFH/SFHI/SFWH/SFWHI Safety Fast Masonry Restraint Hangers

Product Dimensions

References	Dimensions [mm]								Joist Holes		
	A	B	C	D	E	F	G	t	Ø4x6 Obround	Ø4.1	Mini Strap Ø4.1
SFWHI195/75/100	75	195	64	200	103	75	45	2.5	2	2	3
SFWHI200/75/100	75	200	64	200	103	75	45	2.5	2	2	3
SFWHI220/75/100	75	220	64	200	103	75	45	2.5	2	2	3
SFWHI225/75/100	75	225	64	200	103	75	45	2.5	2	2	3
SFWHI235/75/100	75	235	64	200	103	75	45	2.5	2	2	3
SFWHI240/75/100	75	240	64	200	103	75	45	2.5	2	2	3
SFWHI245/75/100	75	245	64	200	103	75	45	2.5	2	2	3
SFWHI253/75/100	75	253	64	200	103	75	45	2.5	2	2	3
SFWHI300/75/100	75	300	64	200	103	75	45	2.5	2	2	3
SFWHI304/75/100	75	304	64	200	103	75	45	2.5	2	2	3
SFWHI350/75/100	75	350	64	200	103	75	45	2.5	2	2	3
SFWHI360/75/100	75	360	64	200	103	75	45	2.5	2	2	3
SFWHI373/75/100	75	373	64	200	103	75	45	2.5	2	2	3
SFWHI400/75/100	75	400	64	200	103	75	45	2.5	2	2	3
SFWHI417/75/100	75	417	64	200	103	75	45	2.5	2	2	3
SFWHI421/75/100	75	421	64	200	103	75	45	2.5	2	2	3
SFWHI195/78/100	78	195	64	200	103	75	45	2.5	2	2	3
SFWHI200/78/100	78	200	64	200	103	75	45	2.5	2	2	3
SFWHI220/78/100	78	220	64	200	103	75	45	2.5	2	2	3
SFWHI225/78/100	78	225	64	200	103	75	45	2.5	2	2	3
SFWHI235/78/100	78	235	64	200	103	75	45	2.5	2	2	3
SFWHI240/78/100	78	240	64	200	103	75	45	2.5	2	2	3
SFWHI245/78/100	78	245	64	200	103	75	45	2.5	2	2	3
SFWHI300/78/100	78	300	64	200	103	75	45	2.5	2	2	3
SFWHI360/78/100	78	360	64	200	103	75	45	2.5	2	2	3
SFWHI400/78/100	78	400	64	200	103	75	45	2.5	2	2	3
SFWHI195/91/100	91	195	64	200	103	75	45	2.5	2	2	3
SFWHI200/91/100	91	200	64	200	103	75	45	2.5	2	2	3
SFWHI220/91/100	91	220	64	200	103	75	45	2.5	2	2	3
SFWHI225/91/100	91	225	64	200	103	75	45	2.5	2	2	3
SFWHI235/91/100	91	235	64	200	103	75	45	2.5	2	2	3
SFWHI240/91/100	91	240	64	200	103	75	45	2.5	2	2	3
SFWHI245/91/100	91	245	64	200	103	75	45	2.5	2	2	3
SFWHI253/91/100	91	253	64	200	103	75	45	2.5	2	2	3
SFWHI300/91/100	91	300	64	200	103	75	45	2.5	2	2	3
SFWHI350/91/100	91	350	64	200	103	75	45	2.5	2	2	3
SFWHI360/91/100	91	360	64	200	103	75	45	2.5	2	2	3
SFWHI400/91/100	91	400	64	200	103	75	45	2.5	2	2	3
SFWHI195/96/100	96	195	64	200	103	75	45	2.5	2	2	3
SFWHI220/96/100	96	220	64	200	103	75	45	2.5	2	2	3
SFWHI225/96/100	96	225	64	200	103	75	45	2.5	2	2	3
SFWHI235/96/100	96	235	64	200	103	75	45	2.5	2	2	3
SFWHI240/96/100	96	240	64	200	103	75	45	2.5	2	2	3
SFWHI245/96/100	96	245	64	200	103	75	45	2.5	2	2	3
SFWHI300/96/100	96	300	64	200	103	75	45	2.5	2	2	3
SFWHI195/99/100	99	195	64	200	103	75	45	2.5	2	2	3
SFWHI200/99/100	99	200	64	200	103	75	45	2.5	2	2	3
SFWHI220/99/100	99	220	64	200	103	75	45	2.5	2	2	3
SFWHI225/99/100	99	225	64	200	103	75	45	2.5	2	2	3
SFWHI235/99/100	99	235	64	200	103	75	45	2.5	2	2	3
SFWHI240/99/100	99	240	64	200	103	75	45	2.5	2	2	3
SFWHI245/99/100	99	245	64	200	103	75	45	2.5	2	2	3
SFWHI253/99/100	99	253	64	200	103	75	45	2.5	2	2	3
SFWHI300/99/100	99	300	64	200	103	75	45	2.5	2	2	3
SFWHI304/99/100	99	304	64	200	103	75	45	2.5	2	2	3
SFWHI350/99/100	99	350	64	200	103	75	45	2.5	2	2	3
SFWHI373/99/100	99	373	64	200	103	75	45	2.5	2	2	3
SFWHI400/99/100	99	400	64	200	103	75	45	2.5	2	2	3
SFWHI417/99/100	99	417	64	200	103	75	45	2.5	2	2	3
SFWHI421/99/100	99	421	64	200	103	75	45	2.5	2	2	3

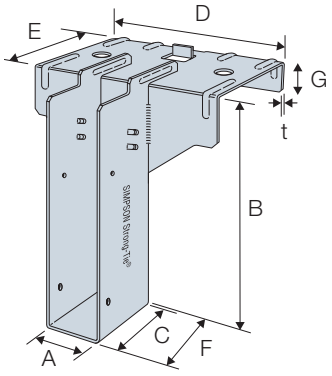

SFWHI

C-C-UK-2023 ©2023 SIMPSON STRONG-TIE COMPANY INC.

SFH/SFHI/SFWH/SFWHI Safety Fast Masonry Restraint Hangers

Product Dimensions

References	Dimensions [mm]								Joist Holes		
	A	B	C	D	E	F	G	t	Ø4x6 Obround	Ø4.1	Mini Strap Ø4.1
SFWHI220/109/100	109	220	64	200	103	75	45	2.5	2	2	3
SFWHI225/109/100	109	225	64	200	103	75	45	2.5	2	2	3
SFWHI240/109/100	109	240	64	200	103	75	45	2.5	2	2	3
SFWHI300/109/100	109	300	64	200	103	75	45	2.5	2	2	3
SFWHI200/122/100	122	200	64	200	103	75	45	2.5	2	2	3
SFWHI220/122/100	122	220	64	200	103	75	45	2.5	2	2	3
SFWHI225/122/100	122	225	64	200	103	75	45	2.5	2	2	3
SFWHI240/122/100	122	240	64	200	103	75	45	2.5	2	2	3
SFWHI300/122/100	122	300	64	200	103	75	45	2.5	2	2	3
SFWHI350/122/100	122	350	64	200	103	75	45	2.5	2	2	3
SFWHI360/122/100	122	360	64	200	103	75	45	2.5	2	2	3
SFWHI400/122/100	122	400	64	200	103	75	45	2.5	2	2	3
SFWHI195/125/100	125	195	64	200	103	75	45	2.5	2	2	3
SFWHI200/125/100	125	200	64	200	103	75	45	2.5	2	2	3
SFWHI220/125/100	125	220	64	200	103	75	45	2.5	2	2	3
SFWHI225/125/100	125	225	64	200	103	75	45	2.5	2	2	3
SFWHI253/125/100	125	253	64	200	103	75	45	2.5	2	2	3
SFWHI304/125/100	125	304	64	200	103	75	45	2.5	2	2	3
SFWHI373/125/100	125	373	64	200	103	75	45	2.5	2	2	3
SFWHI417/125/100	125	417	64	200	103	75	45	2.5	2	2	3
SFWHI421/125/100	125	421	64	200	103	75	45	2.5	2	2	3
SFWHI220/128/100	128	220	64	200	103	75	45	2.5	2	2	3
SFWHI225/128/100	128	225	64	200	103	75	45	2.5	2	2	3
SFWHI235/128/100	128	235	64	200	103	75	45	2.5	2	2	3
SFWHI240/128/100	128	240	64	200	103	75	45	2.5	2	2	3
SFWHI245/128/100	128	245	64	200	103	75	45	2.5	2	2	3
SFWHI300/128/100	128	300	64	200	103	75	45	2.5	2	2	3
SFWHI200/142/100	142	200	64	225	103	75	45	2.5	2	2	3
SFWHI220/142/100	142	220	64	225	103	75	45	2.5	2	2	3
SFWHI225/142/100	142	225	64	225	103	75	45	2.5	2	2	3
SFWHI240/142/100	142	240	64	225	103	75	45	2.5	2	2	3
SFWHI300/142/100	142	300	64	225	103	75	45	2.5	2	2	3
SFWHI360/142/100	142	360	64	225	103	75	45	2.5	2	2	3
SFWHI400/142/100	142	400	64	225	103	75	45	2.5	2	2	3
SFWHI195/146/100	146	195	64	225	103	75	45	2.5	2	2	3
SFWHI200/146/100	146	200	64	225	103	75	45	2.5	2	2	3
SFWHI220/146/100	146	220	64	225	103	75	45	2.5	2	2	3
SFWHI225/146/100	146	225	64	225	103	75	45	2.5	2	2	3
SFWHI235/146/100	146	235	64	225	103	75	45	2.5	2	2	3
SFWHI240/146/100	146	240	64	225	103	75	45	2.5	2	2	3
SFWHI245/146/100	146	245	64	225	103	75	45	2.5	2	2	3
SFWHI300/146/100	146	300	64	225	103	75	45	2.5	2	2	3
SFWHI350/146/100	146	350	64	225	103	75	45	2.5	2	2	3
SFWHI360/146/100	146	360	64	225	103	75	45	2.5	2	2	3
SFWHI400/146/100	146	400	64	225	103	75	45	2.5	2	2	3
SFWHI195/150/100	150	195	64	225	103	75	45	2.5	2	2	3
SFWHI200/150/100	150	200	64	225	103	75	45	2.5	2	2	3
SFWHI220/150/100	150	220	64	225	103	75	45	2.5	2	2	3
SFWHI225/150/100	150	225	64	225	103	75	45	2.5	2	2	3
SFWHI235/150/100	150	235	64	225	103	75	45	2.5	2	2	3
SFWHI240/150/100	150	240	64	225	103	75	45	2.5	2	2	3
SFWHI245/150/100	150	245	64	225	103	75	45	2.5	2	2	3
SFWHI253/150/100	150	253	64	225	103	75	45	2.5	2	2	3
SFWHI300/150/100	150	300	64	225	103	75	45	2.5	2	2	3
SFWHI304/150/100	150	304	64	225	103	75	45	2.5	2	2	3
SFWHI360/150/100	150	360	64	225	103	75	45	2.5	2	2	3
SFWHI373/150/100	150	373	64	225	103	75	45	2.5	2	2	3
SFWHI400/150/100	150	400	64	225	103	75	45	2.5	2	2	3
SFWHI417/150/100	150	417	64	225	103	75	45	2.5	2	2	3
SFWHI421/150/100	150	421	64	225	103	75	45	2.5	2	2	3

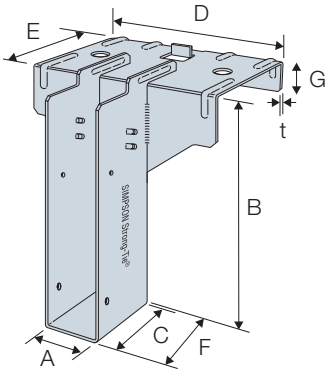

SFWHI

C-C-UK-2023 ©2023 SIMPSON STRONG-TIE COMPANY INC.

SFH/SFHI/SFWH/SFWHI Safety Fast Masonry Restraint Hangers

Product Dimensions

References	Dimensions [mm]								Joist Holes		
	A	B	C	D	E	F	G	t	Ø4x6 Obround	Ø4.1	Mini Strap Ø4.1
SFWHI195/182/100	182	195	64	275	103	75	45	2.5	2	2	3
SFWHI200/182/100	182	200	64	275	103	75	45	2.5	2	2	3
SFWHI220/182/100	182	220	64	275	103	75	45	2.5	2	2	3
SFWHI225/182/100	182	225	64	275	103	75	45	2.5	2	2	3
SFWHI235/182/100	182	235	64	275	103	75	45	2.5	2	2	3
SFWHI240/182/100	182	240	64	275	103	75	45	2.5	2	2	3
SFWHI245/182/100	182	245	64	275	103	75	45	2.5	2	2	3
SFWHI253/182/100	182	253	64	275	103	75	45	2.5	2	2	3
SFWHI300/182/100	182	300	64	275	103	75	45	2.5	2	2	3
SFWHI350/182/100	182	350	64	275	103	75	45	2.5	2	2	3
SFWHI360/182/100	182	360	64	275	103	75	45	2.5	2	2	3
SFWHI400/182/100	182	400	64	275	103	75	45	2.5	2	2	3
SFWHI220/196/100	196	220	64	275	103	75	45	2.5	2	2	3
SFWHI225/196/100	196	225	64	275	103	75	45	2.5	2	2	3
SFWHI235/196/100	196	235	64	275	103	75	45	2.5	2	2	3
SFWHI240/196/100	196	240	64	275	103	75	45	2.5	2	2	3
SFWHI245/196/100	196	245	64	275	103	75	45	2.5	2	2	3
SFWHI300/196/100	196	300	64	275	103	75	45	2.5	2	2	3
SFWHI350/196/100	196	350	64	275	103	75	45	2.5	2	2	3
SFWHI400/196/100	196	400	64	275	103	75	45	2.5	2	2	3
SFWHI195/246/100	246	195	64	325	103	75	45	2.5	2	2	3
SFWHI200/246/100	246	200	64	325	103	75	45	2.5	2	2	3
SFWHI220/246/100	246	220	64	325	103	75	45	2.5	2	2	3
SFWHI225/246/100	246	225	64	325	103	75	45	2.5	2	2	3
SFWHI253/246/100	246	253	64	325	103	75	45	2.5	2	2	3
SFWHI304/246/100	246	304	64	325	103	75	45	2.5	2	2	3
SFWHI373/246/100	246	373	64	325	103	75	45	2.5	2	2	3
SFWHI417/246/100	246	417	64	325	103	75	45	2.5	2	2	3
SFWHI421/246/100	246	421	64	325	103	75	45	2.5	2	2	3
SFWHI195/296/100	296	195	64	375	103	75	45	2.5	2	2	3
SFWHI200/296/100	296	200	64	375	103	75	45	2.5	2	2	3
SFWHI220/296/100	296	220	64	375	103	75	45	2.5	2	2	3
SFWHI225/296/100	296	225	64	375	103	75	45	2.5	2	2	3
SFWHI253/296/100	296	253	64	375	103	75	45	2.5	2	2	3
SFWHI304/296/100	296	304	64	375	103	75	45	2.5	2	2	3
SFWHI373/296/100	296	373	64	375	103	75	45	2.5	2	2	3
SFWHI417/296/100	296	417	64	375	103	75	45	2.5	2	2	3
SFWHI421/296/100	296	421	64	375	103	75	45	2.5	2	2	3

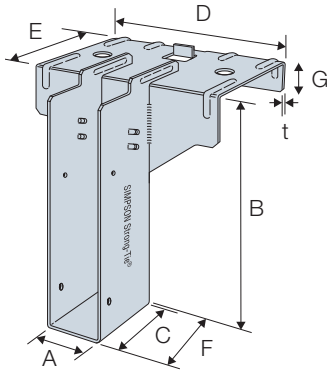

SFWHI

C-C-UK-2023 ©2023 SIMPSON STRONG-TIE COMPANY INC.

JHM/JHMI Joist Hanger for Masonry

The JHM and JHMI range of joist hangers can be used to connect solid sawn joists, trusses and engineered joists to masonry walls or steel beams.

- Built-in slot at the base of the hanger to aid inspection from the ground.
- Top flange provides widest area in contact with masonry support allowing superior performance.
- Embossments on top flange, and holes, allow improved mortar keying.
- Flanges on hangers are much higher than traditional style, providing greatly enhanced resistance to joist rotation.
- Can be installed onto 'I' section or hollow section steel beams.

Material: Pre-galvanised mild steel.

STN RECOMMENDED FIXINGS

XLQ RECOMMENDED FIXINGS

Installation:

- Use all specified fasteners. See table below.
- Hanger must be installed so that the back flange is tight against the face of the supporting member.
- MINIMUM 3 COURSES OF SOLID BLOCK (675MM MASONRY) REQUIRED ABOVE HANGER, WITH MORTAR FULLY CURED, BEFORE APPLYING LOAD.
- Do not stack blocks or heavy loads on the joists during construction unless the joists have additional support to take the full load of the blocks, vertically and horizontally.
- JHM/JHMI range can be mechanically fixed to steel beams of thicknesses up to 12.5mm.
- Timber is required in the web of the 'I' section steel beam when the hanger depth is less than the steel depth.
- Timber must be flush with the outer edges of the 'I' section steel beam.

Options

- Return configuration provides additional support by wrapping around three sides of the block. Designate "return" and length of return dimensions when ordering.
- JHM, JHMR OR JHMS HANGERS DO NOT SATISFY THE REQUIREMENT FOR LATERAL RESTRAINT TYPE HANGERS UNLESS STRAPS ARE FITTED.
- Straddle configuration provides two hangers connected across top of support enabling exact alignment on both sides of supporting wall. Designate "straddle" and length of straddle dimensions when ordering. Minimum standard straddle is 150mm.
- Other widths/heights available. Contact Simpson Strong-Tie® for details.
- SPEC JHM's/JHMI's up to 61mm width can be skewed from 5° to 45°. See skewed hanger load table.

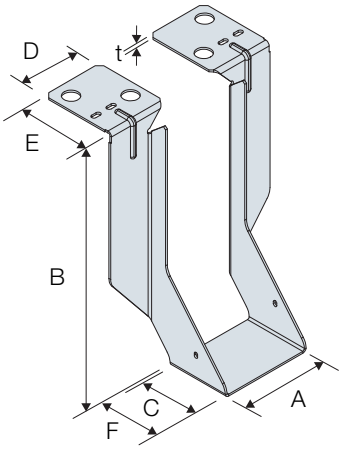

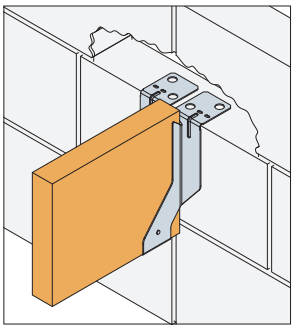

JHM Installed

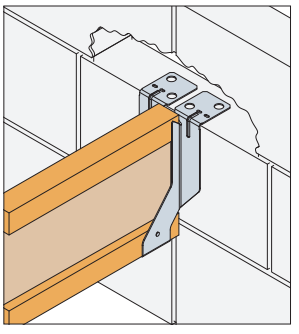

JHMI Installed

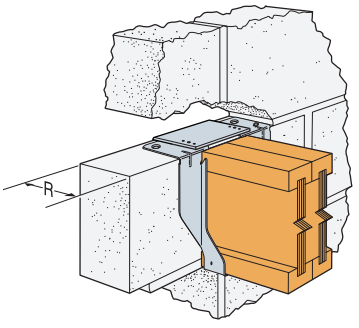

JHMR Installed

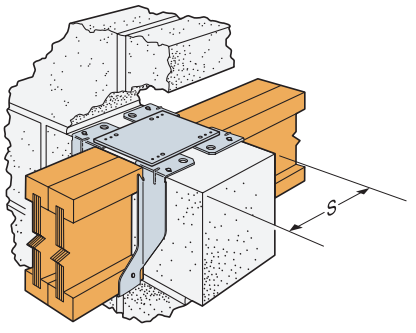

JHMS Installed

C-C-UK-2023 ©2023 SIMPSON STRONG-TIE COMPANY INC.

JHM/JHMI Joist Hanger for Masonry

Performance Values

References	Joist Fasteners		Safe Working Loads [kN]				Characteristic Capacity [kN]			
			$R_{1,SWL}$			$R_{2,SWL,Short\ Term}$	$R_{1,k}$			$R_{2,k}$
	Qty	Type	2.8N/mm² Solid AAC	3.5N/mm² Solid AAC	7.0N/mm² Solid DAC		2.8N/mm² Solid AAC	3.5N/mm² Solid AAC	7.0N/mm² Solid DAC	
JHM/JHMI	2	N3.75x30	5.2	6.4	10.0	1.0	10.5	12.8	20.0	1.8

Performance Values - Skewed

References	Joist Fasteners		Safe Working Loads [kN]			
			$R_{1,SWL}$			$R_{2,SWL,Short\ Term}$
	Qty	Type	2.8N/mm² Solid AAC	3.5N/mm² Solid AAC	7.0N/mm² Solid DAC	
SPEC E JHMSK	4	N3.75x30	5.1	5.2	5.2	1.0

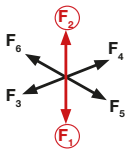

1. Widths from 38mm to 61mm.
2. Maximum skew 45°.

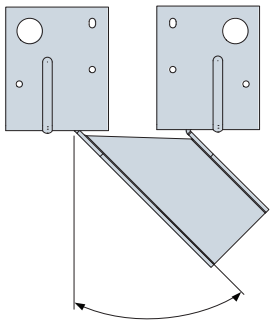

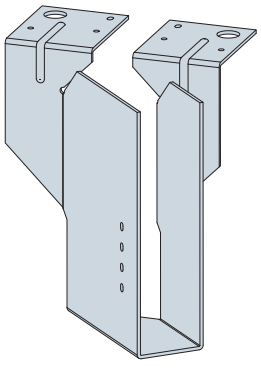

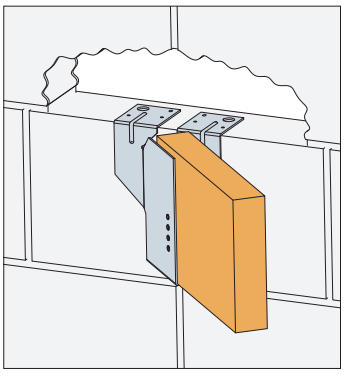

Performance Values onto Steel Beams

References	Fasteners				Safe Working Load [kN]	Characteristic Capacity [kN]
	Steel Beam		Joist			
	Qty	Type	Qty	Type		
JHM/JHMI	2	XLQ114B	2	N3.75x30	10.8	19.0

- See XLQ114B1224 product information below.

XLQ114B1224 Hex Head Self Drilling Screw Specification

Hex Head Size	Length [mm]	Washer Ø [mm]	Shank Ø [mm]	Suitable Steel Thickness [mm]	Recommended Install Speed [RPM]
5/16"	32	16	5.5	3.5 - 12.5	1400

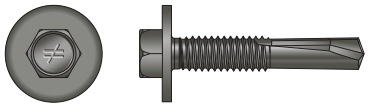

- XLQ114B1224, self drilling screw. Maximum supporting thicknesses of up to 12.5mm.

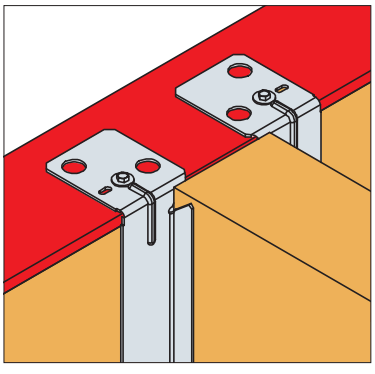

Fasteners to be installed through the inner obround slot in the hanger.

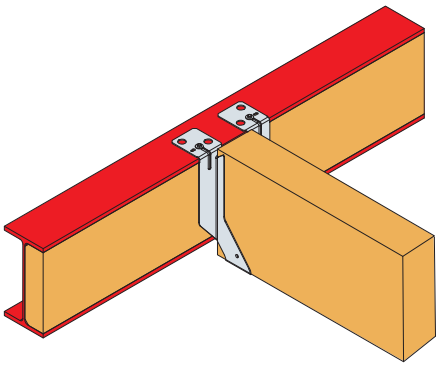

Ensure that the hanger is tight against the face of the supporting member. No gap allowed.

C-C-UK-2023 ©2023 SIMPSON STRONG-TIE COMPANY INC.

JHM/JHMI Joist Hanger for Masonry

Product Dimensions

References	Dimensions [mm]							Joist Holes
	A	B	C	D	E	F	t	Ø4x6 Obround
JHM100/38	38	100	64	64	75	75	2	2
JHM125/38	38	125	64	64	75	75	2	2
JHM150/38	38	140	64	64	75	75	2	2
JHM175/38	38	165	64	64	75	75	2	2
JHM200/38	38	190	64	64	75	75	2	2
JHM225/38	38	215	64	64	75	75	2	2
JHM250/38	38	240	64	64	75	75	2	2
JHM300/38	38	290	64	64	75	75	2	2
JHM100/44	44	100	64	64	75	75	2	2
JHM125/44	44	125	64	64	75	75	2	2
JHM150/44	44	140	64	64	75	75	2	2
JHM175/44	44	165	64	64	75	75	2	2
JHM200/44	44	190	64	64	75	75	2	2
JHM225/44	44	215	64	64	75	75	2	2
JHM250/44	44	240	64	64	75	75	2	2
JHM300/44	44	290	64	64	75	75	2	2
JHM100/47	47	100	64	64	75	75	2	2
JHM125/47	47	125	64	64	75	75	2	2
JHM150/47	47	140	64	64	75	75	2	2
JHM175/47	47	165	64	64	75	75	2	2
JHM200/47	47	190	64	64	75	75	2	2
JHM225/47	47	215	64	64	75	75	2	2
JHM250/47	47	240	64	64	75	75	2	2
JHM300/47	47	290	64	64	75	75	2	2
JHM100/50	50	100	64	64	75	75	2	2
JHM125/50	50	125	64	64	75	75	2	2
JHM150/50	50	140	64	64	75	75	2	2
JHM175/50	50	165	64	64	75	75	2	2
JHM200/50	50	190	64	64	75	75	2	2
JHM225/50	50	215	64	64	75	75	2	2
JHM250/50	50	240	64	64	75	75	2	2
JHM300/50	50	290	64	64	75	75	2	2
JHM100/63	63	100	64	64	75	75	2	2
JHM125/63	63	125	64	64	75	75	2	2
JHM150/63	63	140	64	64	75	75	2	2
JHM175/63	63	165	64	64	75	75	2	2
JHM200/63	63	190	64	64	75	75	2	2
JHM225/63	63	215	64	64	75	75	2	2
JHM250/63	63	240	64	64	75	75	2	2
JHM300/63	63	290	64	64	75	75	2	2
JHM100/75	75	100	64	64	75	75	2	2
JHM125/75	75	125	64	64	75	75	2	2
JHM150/75	75	140	64	64	75	75	2	2
JHM175/75	75	165	64	64	75	75	2	2
JHM200/75	75	190	64	64	75	75	2	2
JHM225/75	75	215	64	64	75	75	2	2
JHM250/75	75	240	64	64	75	75	2	2
JHM300/75	75	290	64	64	75	75	2	2
JHM100/91	91	100	64	64	75	75	2	2
JHM125/91	91	125	64	64	75	75	2	2
JHM150/91	91	140	64	64	75	75	2	2
JHM175/91	91	165	64	64	75	75	2	2
JHM200/91	91	190	64	64	75	75	2	2
JHM225/91	91	215	64	64	75	75	2	2
JHM250/91	91	240	64	64	75	75	2	2
JHM300/91	91	290	64	64	75	75	2	2
JHM100/96	96	100	64	64	75	75	2	2
JHM125/96	96	125	64	64	75	75	2	2
JHM150/96	96	140	64	64	75	75	2	2
JHM175/96	96	165	64	64	75	75	2	2

References	Dimensions [mm]							Joist Holes
	A	B	C	D	E	F	t	Ø4x6 Obround
JHM200/96	96	190	64	64	75	75	2	2
JHM225/96	96	215	64	64	75	75	2	2
JHM250/96	96	240	64	64	75	75	2	2
JHM300/96	96	290	64	64	75	75	2	2
JHM100/99	99	100	64	64	75	75	2	2
JHM125/99	99	125	64	64	75	75	2	2
JHM150/99	99	140	64	64	75	75	2	2
JHM175/99	99	165	64	64	75	75	2	2
JHM200/99	99	190	64	64	75	75	2	2
JHM225/99	99	215	64	64	75	75	2	2
JHM250/99	99	240	64	64	75	75	2	2
JHM300/99	99	290	64	64	75	75	2	2
JHM100/116	116	100	64	64	75	75	2	2
JHM125/116	116	125	64	64	75	75	2	2
JHM150/116	116	140	64	64	75	75	2	2
JHM175/116	116	165	64	64	75	75	2	2
JHM200/116	116	190	64	64	75	75	2	2
JHM225/116	116	215	64	64	75	75	2	2
JHM250/116	116	240	64	64	75	75	2	2
JHM300/116	116	290	64	64	75	75	2	2
JHM100/125	125	100	64	64	75	75	2	2
JHM125/125	125	125	64	64	75	75	2	2
JHM150/125	125	140	64	64	75	75	2	2
JHM175/125	125	165	64	64	75	75	2	2
JHM200/125	125	190	64	64	75	75	2	2
JHM225/125	125	215	64	64	75	75	2	2
JHM250/125	125	240	64	64	75	75	2	2
JHM300/125	125	290	64	64	75	75	2	2
JHM100/135	135	100	64	64	75	75	2	2
JHM125/135	135	125	64	64	75	75	2	2
JHM150/135	135	140	64	64	75	75	2	2
JHM175/135	135	165	64	64	75	75	2	2
JHM200/135	135	190	64	64	75	75	2	2
JHM225/135	135	215	64	64	75	75	2	2
JHM250/135	135	240	64	64	75	75	2	2
JHM300/135	135	290	64	64	75	75	2	2
JHM100/142	142	100	64	64	75	75	2	2
JHM125/142	142	125	64	64	75	75	2	2
JHM150/142	142	140	64	64	75	75	2	2
JHM175/142	142	165	64	64	75	75	2	2
JHM200/142	142	190	64	64	75	75	2	2
JHM225/142	142	215	64	64	75	75	2	2
JHM250/142	142	240	64	64	75	75	2	2
JHM300/142	142	290	64	64	75	75	2	2
JHM100/146	146	100	64	64	75	75	2	2
JHM125/146	146	125	64	64	75	75	2	2
JHM150/146	146	140	64	64	75	75	2	2
JHM175/146	146	165	64	64	75	75	2	2
JHM200/146	146	190	64	64	75	75	2	2
JHM225/146	146	215	64	64	75	75	2	2
JHM250/146	146	240	64	64	75	75	2	2
JHM300/146	146	290	64	64	75	75	2	2
JHM100/150	150	100	64	64	75	75	2	2
JHM125/150	150	125	64	64	75	75	2	2
JHM150/150	150	140	64	64	75	75	2	2
JHM175/150	150	165	64	64	75	75	2	2
JHM200/150	150	190	64	64	75	75	2	2
JHM225/150	150	215	64	64	75	75	2	2
JHM250/150	150	240	64	64	75	75	2	2
JHM300/150	150	290	64	64	75	75	2	2

C-C-UK-2023 ©2023 SIMPSON STRONG-TIE COMPANY INC.

JHM/JHMI Joist Hanger for Masonry

SIMPSON Strong-Tie®

Product Dimensions

References	Dimensions [mm]							Joist Holes
	A	B	C	D	E	F	t	Ø4x6 Obround
JHMI195/40	40	195	64	64	75	75	2	2
JHMI200/40	40	200	64	64	75	75	2	2
JHMI220/40	40	220	64	64	75	75	2	2
JHMI225/40	40	225	64	64	75	75	2	2
JHMI235/40	40	235	64	64	75	75	2	2
JHMI240/40	40	240	64	64	75	75	2	2
JHMI245/40	40	245	64	64	75	75	2	2
JHMI300/40	40	300	64	64	75	75	2	2
JHMI360/40	40	360	64	64	75	75	2	2
JHMI400/40	40	400	64	64	75	75	2	2
JHMI195/47	47	195	64	64	75	75	2	2
JHMI200/47	47	200	64	64	75	75	2	2
JHMI220/47	47	220	64	64	75	75	2	2
JHMI225/47	47	225	64	64	75	75	2	2
JHMI235/47	47	235	64	64	75	75	2	2
JHMI240/47	47	240	64	64	75	75	2	2
JHMI245/47	47	245	64	64	75	75	2	2
JHMI253/47	47	253	64	64	75	75	2	2
JHMI300/47	47	300	64	64	75	75	2	2
JHMI350/47	47	350	64	64	75	75	2	2
JHMI360/47	47	360	64	64	75	75	2	2
JHMI400/47	47	400	64	64	75	75	2	2
JHMI220/50	50	220	64	64	75	75	2	2
JHMI225/50	50	225	64	64	75	75	2	2
JHMI240/50	50	240	64	64	75	75	2	2
JHMI300/50	50	300	64	64	75	75	2	2
JHMI220/56	56	220	64	64	75	75	2	2
JHMI225/56	56	225	64	64	75	75	2	2
JHMI240/56	56	240	64	64	75	75	2	2
JHMI300/56	56	300	64	64	75	75	2	2
JHMI200/61	61	200	64	64	75	75	2	2
JHMI360/61	61	360	64	64	75	75	2	2
JHMI400/61	61	400	64	64	75	75	2	2
JHMI200/63	63	200	64	64	75	75	2	2
JHMI220/63	63	220	64	64	75	75	2	2
JHMI225/63	63	225	64	64	75	75	2	2
JHMI240/63	63	240	64	64	75	75	2	2
JHMI300/63	63	300	64	64	75	75	2	2
JHMI350/63	63	350	64	64	75	75	2	2
JHMI360/63	63	360	64	64	75	75	2	2
JHMI400/63	63	400	64	64	75	75	2	2
JHMI220/66	66	220	64	64	75	75	2	2
JHMI225/66	66	225	64	64	75	75	2	2
JHMI235/66	66	235	64	64	75	75	2	2
JHMI240/66	66	240	64	64	75	75	2	2
JHMI245/66	66	245	64	64	75	75	2	2
JHMI300/66	66	300	64	64	75	75	2	2
JHMI200/72	72	200	64	64	75	75	2	2
JHMI220/72	72	220	64	64	75	75	2	2
JHMI225/72	72	225	64	64	75	75	2	2
JHMI240/72	72	240	64	64	75	75	2	2
JHMI300/72	72	300	64	64	75	75	2	2
JHMI360/72	72	360	64	64	75	75	2	2
JHMI400/72	72	400	64	64	75	75	2	2
JHMI195/75	75	195	64	64	75	75	2	2
JHMI200/75	75	200	64	64	75	75	2	2
JHMI220/75	75	220	64	64	75	75	2	2
JHMI225/75	75	225	64	64	75	75	2	2

References	Dimensions [mm]							Joist Holes
	A	B	C	D	E	F	t	Ø4x6 Obround
JHMI235/75	75	235	64	64	75	75	2	2
JHMI240/75	75	240	64	64	75	75	2	2
JHMI245/75	75	245	64	64	75	75	2	2
JHMI253/75	75	253	64	64	75	75	2	2
JHMI300/75	75	300	64	64	75	75	2	2
JHMI304/75	75	304	64	64	75	75	2	2
JHMI350/75	75	350	64	64	75	75	2	2
JHMI360/75	75	360	64	64	75	75	2	2
JHMI373/75	75	373	64	64	75	75	2	2
JHMI400/75	75	400	64	64	75	75	2	2
JHMI417/75	75	417	64	64	75	75	2	2
JHMI421/75	75	421	64	64	75	75	2	2
JHMI195/78	78	195	64	64	75	75	2	2
JHMI200/78	78	200	64	64	75	75	2	2
JHMI220/78	78	220	64	64	75	75	2	2
JHMI225/78	78	225	64	64	75	75	2	2
JHMI235/78	78	235	64	64	75	75	2	2
JHMI240/78	78	240	64	64	75	75	2	2
JHMI245/78	78	245	64	64	75	75	2	2
JHMI300/78	78	300	64	64	75	75	2	2
JHMI360/78	78	360	64	64	75	75	2	2
JHMI400/78	78	400	64	64	75	75	2	2
JHMI195/91	91	195	64	64	75	75	2	2
JHMI200/91	91	200	64	64	75	75	2	2
JHMI220/91	91	220	64	64	75	75	2	2
JHMI225/91	91	225	64	64	75	75	2	2
JHMI235/91	91	235	64	64	75	75	2	2
JHMI240/91	91	240	64	64	75	75	2	2
JHMI245/91	91	245	64	64	75	75	2	2
JHMI253/91	91	253	64	64	75	75	2	2
JHMI300/91	91	300	64	64	75	75	2	2
JHMI350/91	91	350	64	64	75	75	2	2
JHMI360/91	91	360	64	64	75	75	2	2
JHMI400/91	91	400	64	64	75	75	2	2
JHMI220/96	96	220	64	64	75	75	2	2
JHMI225/96	96	225	64	64	75	75	2	2
JHMI240/96	96	240	64	64	75	75	2	2
JHMI300/96	96	300	64	64	75	75	2	2
JHMI195/99	99	195	64	64	75	75	2	2
JHMI200/99	99	200	64	64	75	75	2	2
JHMI220/99	99	220	64	64	75	75	2	2
JHMI225/99	99	225	64	64	75	75	2	2
JHMI235/99	99	235	64	64	75	75	2	2
JHMI240/99	99	240	64	64	75	75	2	2
JHMI245/99	99	245	64	64	75	75	2	2
JHMI253/99	99	253	64	64	75	75	2	2
JHMI300/99	99	300	64	64	75	75	2	2
JHMI304/99	99	304	64	64	75	75	2	2
JHMI350/99	99	350	64	64	75	75	2	2
JHMI373/99	99	373	64	64	75	75	2	2
JHMI400/99	99	400	64	64	75	75	2	2
JHMI417/99	99	417	64	64	75	75	2	2
JHMI421/99	99	421	64	64	75	75	2	2
JHMI220/109	109	220	64	64	75	75	2	2
JHMI225/109	109	225	64	64	75	75	2	2
JHMI240/109	109	240	64	64	75	75	2	2
JHMI300/109	109	300	64	64	75	75	2	2

C-C-UK-2023 ©2023 SIMPSON STRONG-TIE COMPANY INC.

JHM/JHMI Joist Hanger for Masonry

Product Dimensions

References	Dimensions [mm]							Joist Holes
	A	B	C	D	E	F	t	Ø4x6 Obround
JHMI200/122	122	200	64	64	75	75	2	2
JHMI220/122	122	220	64	64	75	75	2	2
JHMI225/122	122	225	64	64	75	75	2	2
JHMI240/122	122	240	64	64	75	75	2	2
JHMI300/122	122	300	64	64	75	75	2	2
JHMI350/122	122	350	64	64	75	75	2	2
JHMI360/122	122	360	64	64	75	75	2	2
JHMI400/122	122	400	64	64	75	75	2	2
JHMI195/125	125	195	64	64	75	75	2	2
JHMI200/125	125	200	64	64	75	75	2	2
JHMI220/125	125	220	64	64	75	75	2	2
JHMI225/125	125	225	64	64	75	75	2	2
JHMI253/125	125	253	64	64	75	75	2	2
JHMI304/125	125	304	64	64	75	75	2	2
JHMI373/125	125	373	64	64	75	75	2	2
JHMI417/125	125	417	64	64	75	75	2	2
JHMI421/125	125	421	64	64	75	75	2	2
JHMI220/128	128	220	64	64	75	75	2	2
JHMI225/128	128	225	64	64	75	75	2	2
JHMI235/128	128	235	64	64	75	75	2	2
JHMI240/128	128	240	64	64	75	75	2	2
JHMI245/128	128	245	64	64	75	75	2	2
JHMI300/128	128	300	64	64	75	75	2	2
JHMI200/142	142	200	64	64	75	75	2	2
JHMI220/142	142	220	64	64	75	75	2	2
JHMI225/142	142	225	64	64	75	75	2	2
JHMI240/142	142	240	64	64	75	75	2	2
JHMI300/142	142	300	64	64	75	75	2	2
JHMI360/142	142	360	64	64	75	75	2	2
JHMI400/142	142	400	64	64	75	75	2	2
JHMI195/146	146	195	64	64	75	75	2	2
JHMI200/146	146	200	64	64	75	75	2	2
JHMI220/146	146	220	64	64	75	75	2	2
JHMI225/146	146	225	64	64	75	75	2	2
JHMI235/146	146	235	64	64	75	75	2	2
JHMI240/146	146	240	64	64	75	75	2	2
JHMI245/146	146	245	64	64	75	75	2	2
JHMI300/146	146	300	64	64	75	75	2	2
JHMI350/146	146	350	64	64	75	75	2	2
JHMI360/146	146	360	64	64	75	75	2	2
JHMI400/146	146	400	64	64	75	75	2	2
JHMI195/150	150	195	64	64	75	75	2	2
JHMI200/150	150	200	64	64	75	75	2	2
JHMI220/150	150	220	64	64	75	75	2	2
JHMI225/150	150	225	64	64	75	75	2	2
JHMI235/150	150	235	64	64	75	75	2	2
JHMI240/150	150	240	64	64	75	75	2	2
JHMI245/150	150	245	64	64	75	75	2	2
JHMI253/150	150	253	64	64	75	75	2	2
JHMI300/150	150	300	64	64	75	75	2	2
JHMI304/150	150	304	64	64	75	75	2	2
JHMI360/150	150	360	64	64	75	75	2	2
JHMI373/150	150	373	64	64	75	75	2	2
JHMI400/150	150	400	64	64	75	75	2	2
JHMI417/150	150	417	64	64	75	75	2	2
JHMI421/150	150	421	64	64	75	75	2	2

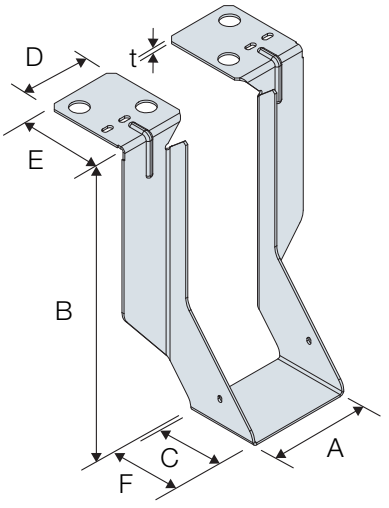

C-C-UK-2023 ©2023 SIMPSON STRONG-TIE COMPANY INC.

HJHM/HJHMI Masonry Hangers

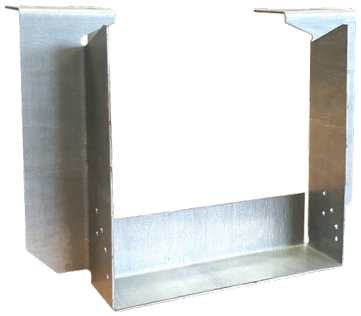

The HJHMI range of joist hangers can be used to connect solid sawn joists, trusses, and engineered joists to masonry walls or steel beams.

- Top flange provides widest area in contact with masonry support allowing superior performance.
- HJHM/HJHMI side flange on deeper hangers is much higher than traditional style, providing greatly enhanced resistance to joist rotation.

Material: Pre-galvanised mild steel.

STN RECOMMENDED FIXINGS

Performance Values

References	A	Joist Fasteners		Safe Working Loads [kN]				Characteristic Capacity [kN]			
				$R_{1,SWL}$			$R_{2,SWL,Short\ Term}$	$R_{1,k}$			$R_{2,k}$
		Qty	Type	2.8N/mm² Solid AAC	3.5N/mm² Solid AAC	7.0N/mm² Solid DAC		2.8N/mm² Solid AAC	3.5N/mm² Solid AAC	7.0N/mm² Solid DAC	
HJHM/HJHMI	40 - 74	2	N3.75 x 30	8.0	8.0	15.0	1.0	16.0	16.0	30.0	1.8
	75 - 200	2	N3.75 x 30	8.0	14.8	15.0	1.0	16.0	29.7	30.0	1.8
	201 - 300	2	N3.75 x 30	8.2	8.2	21.5	1.0	15.1	15.1	37.6	1.8
	91 - 300	8	N4.0 x 90	8.0	14.8	20.9	1.0	16.0	29.7	41.8	1.8

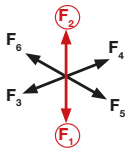

Installation:

- Set the hanger back flange tight against the block wall when built to desired level, then continue with additonal courses to complete wall height. Joist should be tight into the back of the hanger. Maximum gap permitted is 6mm.
- Use all specified fasteners.
- MINIMUM 3 COURSES OF SOLID BLOCK (675MM MASONRY) REQUIRED ABOVE HANGER, WITH MORTAR FULLY CURED, BEFORE APPLYING LOAD.
- Do not stack blocks or heavy loads on the joists during construction unless the joists have additonal support to take the full load of the blocks vertically and horizontally.
- The shot-fired pins must be installed by a qualified person in accordance with the manufacturer's installation requirements.

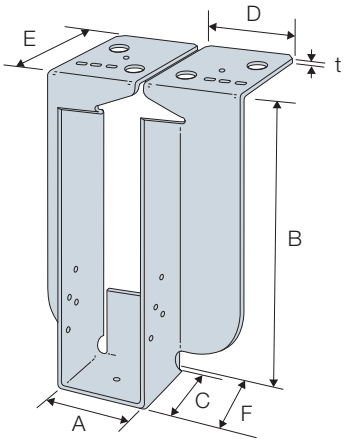

C-C-UK-2023 ©2023 SIMPSON STRONG-TIE COMPANY INC.

HJHM/HJHMI Masonry Hangers

SIMPSON Strong-Tie

Product Dimensions

References	Dimensions [mm]							Joist Holes	
	A	B	C	D	E	F	t	Ø4x6 Obround	Triangular
HJHM100/40	40	100	75	90	90	78	3	2	8
HJHM125/40	40	125	75	90	90	78	3	2	8
HJHM150/40	40	140	75	90	90	78	3	2	8
HJHM175/40	40	165	75	90	90	78	3	2	8
HJHM200/40	40	190	75	90	90	78	3	2	8
HJHM225/40	40	215	75	90	90	78	3	2	8
HJHM250/40	40	240	75	90	90	78	3	2	8
HJHM300/40	40	290	75	90	90	78	3	2	8
HJHM100/47	47	100	75	90	90	78	3	2	8
HJHM125/47	47	125	75	90	90	78	3	2	8
HJHM150/47	47	140	75	90	90	78	3	2	8
HJHM175/47	47	165	75	90	90	78	3	2	8
HJHM200/47	47	190	75	90	90	78	3	2	8
HJHM225/47	47	215	75	90	90	78	3	2	8
HJHM250/47	47	240	75	90	90	78	3	2	8
HJHM300/47	47	290	75	90	90	78	3	2	8
HJHM100/50	50	100	75	90	90	78	3	2	8
HJHM125/50	50	125	75	90	90	78	3	2	8
HJHM150/50	50	140	75	90	90	78	3	2	8
HJHM175/50	50	165	75	90	90	78	3	2	8
HJHM200/50	50	190	75	90	90	78	3	2	8
HJHM225/50	50	215	75	90	90	78	3	2	8
HJHM250/50	50	240	75	90	90	78	3	2	8
HJHM300/50	50	290	75	90	90	78	3	2	8
HJHM100/63	63	100	75	90	90	78	3	2	8
HJHM125/63	63	125	75	90	90	78	3	2	8
HJHM150/63	63	140	75	90	90	78	3	2	8
HJHM175/63	63	165	75	90	90	78	3	2	8
HJHM200/63	63	190	75	90	90	78	3	2	8
HJHM225/63	63	215	75	90	90	78	3	2	8
HJHM250/63	63	240	75	90	90	78	3	2	8
HJHM300/63	63	290	75	90	90	78	3	2	8
HJHM100/75	75	100	80	110	92.5	92.5	3	2	8
HJHM125/75	75	125	80	110	92.5	92.5	3	2	8
HJHM150/75	75	140	80	110	92.5	92.5	3	2	8
HJHM175/75	75	165	80	110	92.5	92.5	3	2	8
HJHM200/75	75	190	80	110	92.5	92.5	3	2	8
HJHM225/75	75	215	80	110	92.5	92.5	3	2	8
HJHM250/75	75	240	80	110	92.5	92.5	3	2	8
HJHM300/75	75	290	80	110	92.5	92.5	3	2	8
HJHM100/91	91	100	80	110	92.5	92.5	3	2	8
HJHM125/91	91	125	80	110	92.5	92.5	3	2	8
HJHM150/91	91	140	80	110	92.5	92.5	3	2	8
HJHM175/91	91	165	80	110	92.5	92.5	3	2	8
HJHM200/91	91	190	80	110	92.5	92.5	3	2	8
HJHM225/91	91	215	80	110	92.5	92.5	3	2	8
HJHM250/91	91	240	80	110	92.5	92.5	3	2	8
HJHM300/91	91	290	80	110	92.5	92.5	3	2	8
HJHM100/96	96	100	80	110	92.5	92.5	3	2	8
HJHM125/96	96	125	80	110	92.5	92.5	3	2	8
HJHM150/96	96	140	80	110	92.5	92.5	3	2	8
HJHM175/96	96	165	80	110	92.5	92.5	3	2	8

References	Dimensions [mm]							Joist Holes	
	A	B	C	D	E	F	t	Ø4x6 Obround	Triangular
HJHM200/96	96	190	80	110	92.5	92.5	3	2	8
HJHM225/96	96	215	80	110	92.5	92.5	3	2	8
HJHM250/96	96	240	80	110	92.5	92.5	3	2	8
HJHM300/96	96	290	80	110	92.5	92.5	3	2	8
HJHM100/99	99	100	80	110	92.5	92.5	3	2	8
HJHM125/99	99	125	80	110	92.5	92.5	3	2	8
HJHM150/99	99	140	80	110	92.5	92.5	3	2	8
HJHM175/99	99	165	80	110	92.5	92.5	3	2	8
HJHM200/99	99	190	80	110	92.5	92.5	3	2	8
HJHM225/99	99	215	80	110	92.5	92.5	3	2	8
HJHM250/99	99	240	80	110	92.5	92.5	3	2	8
HJHM300/99	99	290	80	110	92.5	92.5	3	2	8
HJHM100/116	116	100	80	110	92.5	92.5	3	2	8
HJHM125/116	116	125	80	110	92.5	92.5	3	2	8
HJHM150/116	116	140	80	110	92.5	92.5	3	2	8
HJHM175/116	116	165	80	110	92.5	92.5	3	2	8
HJHM200/116	116	190	80	110	92.5	92.5	3	2	8
HJHM225/116	116	215	80	110	92.5	92.5	3	2	8
HJHM250/116	116	240	80	110	92.5	92.5	3	2	8
HJHM300/116	116	290	80	110	92.5	92.5	3	2	8
HJHM100/125	125	100	80	110	92.5	92.5	3	2	8
HJHM125/125	125	125	80	110	92.5	92.5	3	2	8
HJHM150/125	125	140	80	110	92.5	92.5	3	2	8
HJHM175/125	125	165	80	110	92.5	92.5	3	2	8
HJHM200/125	125	190	80	110	92.5	92.5	3	2	8
HJHM225/125	125	215	80	110	92.5	92.5	3	2	8
HJHM250/125	125	240	80	110	92.5	92.5	3	2	8
HJHM300/125	125	290	80	110	92.5	92.5	3	2	8
HJHM100/135	135	100	80	110	92.5	92.5	3	2	8
HJHM125/135	135	125	80	110	92.5	92.5	3	2	8
HJHM150/135	135	140	80	110	92.5	92.5	3	2	8
HJHM175/135	135	165	80	110	92.5	92.5	3	2	8
HJHM200/135	135	190	80	110	92.5	92.5	3	2	8
HJHM225/135	135	215	80	110	92.5	92.5	3	2	8
HJHM250/135	135	240	80	110	92.5	92.5	3	2	8
HJHM300/135	135	290	80	110	92.5	92.5	3	2	8
HJHM100/142	142	100	80	110	92.5	92.5	3	2	8
HJHM125/142	142	125	80	110	92.5	92.5	3	2	8
HJHM150/142	142	140	80	110	92.5	92.5	3	2	8
HJHM175/142	142	165	80	110	92.5	92.5	3	2	8
HJHM200/142	142	190	80	110	92.5	92.5	3	2	8
HJHM225/142	142	215	80	110	92.5	92.5	3	2	8
HJHM250/142	142	240	80	110	92.5	92.5	3	2	8
HJHM300/142	142	290	80	110	92.5	92.5	3	2	8
HJHM100/146	146	100	80	110	92.5	92.5	3	2	8
HJHM125/146	146	125	80	110	92.5	92.5	3	2	8
HJHM150/146	146	140	80	110	92.5	92.5	3	2	8
HJHM175/146	146	165	80	110	92.5	92.5	3	2	8
HJHM200/146	146	190	80	110	92.5	92.5	3	2	8
HJHM225/146	146	215	80	110	92.5	92.5	3	2	8
HJHM250/146	146	240	80	110	92.5	92.5	3	2	8
HJHM300/146	146	290	80	110	92.5	92.5	3	2	8

C-C-UK-2023 ©2023 SIMPSON STRONG-TIE COMPANY INC.

HJHM/HJHMI Masonry Hangers

SIMPSON Strong-Tie®

Product Dimensions

References	Dimensions [mm]							Joist Holes	
	A	B	C	D	E	F	t	Ø4x6 Obround	Triangular
HJHM100/150	150	100	80	110	92.5	92.5	3	2	8
HJHM125/150	150	125	80	110	92.5	92.5	3	2	8
HJHM150/150	150	140	80	110	92.5	92.5	3	2	8
HJHM175/150	150	165	80	110	92.5	92.5	3	2	8
HJHM200/150	150	190	80	110	92.5	92.5	3	2	8
HJHM225/150	150	215	80	110	92.5	92.5	3	2	8
HJHM250/150	150	240	80	110	92.5	92.5	3	2	8
HJHM300/150	150	290	80	110	92.5	92.5	3	2	8
HJHM100/180	180	100	80	110	92.5	92.5	3	2	8
HJHM125/180	180	125	80	110	92.5	92.5	3	2	8
HJHM150/180	180	140	80	110	92.5	92.5	3	2	8
HJHM175/180	180	165	80	110	92.5	92.5	3	2	8
HJHM200/180	180	190	80	110	92.5	92.5	3	2	8
HJHM225/180	180	215	80	110	92.5	92.5	3	2	8
HJHM250/180	180	240	80	110	92.5	92.5	3	2	8
HJHM300/180	180	290	80	110	92.5	92.5	3	2	8
HJHM100/190	190	100	80	110	92.5	92.5	3	2	8
HJHM125/190	190	125	80	110	92.5	92.5	3	2	8
HJHM150/190	190	140	80	110	92.5	92.5	3	2	8
HJHM175/190	190	165	80	110	92.5	92.5	3	2	8
HJHM200/190	190	190	80	110	92.5	92.5	3	2	8
HJHM225/190	190	215	80	110	92.5	92.5	3	2	8
HJHM250/190	190	240	80	110	92.5	92.5	3	2	8
HJHM300/190	190	290	80	110	92.5	92.5	3	2	8

References	Dimensions [mm]							Joist Holes	
	A	B	C	D	E	F	t	Ø4x6 Obround	Triangular
HJHM100/200	200	100	80	110	92.5	92.5	3	2	8
HJHM125/200	200	125	80	110	92.5	92.5	3	2	8
HJHM150/200	200	140	80	110	92.5	92.5	3	2	8
HJHM175/200	200	165	80	110	92.5	92.5	3	2	8
HJHM200/200	200	190	80	110	92.5	92.5	3	2	8
HJHM225/200	200	215	80	110	92.5	92.5	3	2	8
HJHM250/200	200	240	80	110	92.5	92.5	3	2	8
HJHM300/200	200	290	80	110	92.5	92.5	3	2	8
HJHM100/225	225	100	80	110	92.5	92.5	3	2	8
HJHM125/225	225	125	80	110	92.5	92.5	3	2	8
HJHM150/225	225	140	80	110	92.5	92.5	3	2	8
HJHM175/225	225	165	80	110	92.5	92.5	3	2	8
HJHM200/225	225	190	80	110	92.5	92.5	3	2	8
HJHM225/225	225	215	80	110	92.5	92.5	3	2	8
HJHM250/225	225	240	80	110	92.5	92.5	3	2	8
HJHM300/225	225	290	80	110	92.5	92.5	3	2	8
HJHM100/300	300	100	80	110	92.5	92.5	3	2	8
HJHM125/300	300	125	80	110	92.5	92.5	3	2	8
HJHM150/300	300	140	80	110	92.5	92.5	3	2	8
HJHM175/300	300	165	80	110	92.5	92.5	3	2	8
HJHM200/300	300	190	80	110	92.5	92.5	3	2	8
HJHM225/300	300	215	80	110	92.5	92.5	3	2	8
HJHM250/300	300	240	80	110	92.5	92.5	3	2	8
HJHM300/300	300	290	80	110	92.5	92.5	3	2	8

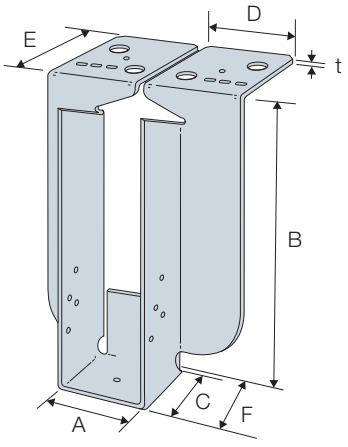

C-C-UK-2023 ©2023 SIMPSON STRONG-TIE COMPANY INC.

HJHM/HJHMI Masonry Hangers

SIMPSON Strong-Tie®

Product Dimensions

References	Dimensions [mm]							Joist Holes	
	A	B	C	D	E	F	t	Ø4x6 Obround	Triangular
HJHMI195/40	40	195	75	90	90	78	3	2	8
HJHMI200/40	40	200	75	90	90	78	3	2	8
HJHMI220/40	40	220	75	90	90	78	3	2	8
HJHMI225/40	40	225	75	90	90	78	3	2	8
HJHMI240/40	40	240	75	90	90	78	3	2	8
HJHMI245/40	40	245	75	90	90	78	3	2	8
HJHMI300/40	40	300	75	90	90	78	3	2	8
HJHMI360/40	40	360	75	90	90	78	3	2	8
HJHMI400/40	40	400	75	90	90	78	3	2	8
HJHMI195/47	47	195	75	90	90	78	3	2	8
HJHMI200/47	47	200	75	90	90	78	3	2	8
HJHMI220/47	47	220	75	90	90	78	3	2	8
HJHMI225/47	47	225	75	90	90	78	3	2	8
HJHMI240/47	47	240	75	90	90	78	3	2	8
HJHMI245/47	47	245	75	90	90	78	3	2	8
HJHMI253/47	47	253	75	90	90	78	3	2	8
HJHMI300/47	47	300	75	90	90	78	3	2	8
HJHMI350/47	47	350	75	90	90	78	3	2	8
HJHMI360/47	47	360	75	90	90	78	3	2	8
HJHMI400/47	47	400	75	90	90	78	3	2	8
HJHMI195/50	50	195	75	90	90	78	3	2	8
HJHMI220/50	50	220	75	90	90	78	3	2	8
HJHMI225/50	50	225	75	90	90	78	3	2	8
HJHMI235/50	50	235	75	90	90	78	3	2	8
HJHMI240/50	50	240	75	90	90	78	3	2	8
HJHMI245/50	50	245	75	90	90	78	3	2	8
HJHMI300/50	50	300	75	90	90	78	3	2	8
HJHMI220/56	56	220	75	90	90	78	3	2	8
HJHMI225/56	56	225	75	90	90	78	3	2	8
HJHMI240/56	56	240	75	90	90	78	3	2	8
HJHMI300/56	56	300	75	90	90	78	3	2	8
HJHMI200/61	61	200	75	90	90	78	3	2	8
HJHMI360/61	61	360	75	90	90	78	3	2	8
HJHMI400/61	61	400	75	90	90	78	3	2	8
HJHMI200/63	63	200	75	90	90	78	3	2	8
HJHMI220/63	63	220	75	90	90	78	3	2	8
HJHMI225/63	63	225	75	90	90	78	3	2	8
HJHMI240/63	63	240	75	90	90	78	3	2	8
HJHMI300/63	63	300	75	90	90	78	3	2	8
HJHMI350/63	63	350	75	90	90	78	3	2	8
HJHMI360/63	63	360	75	90	90	78	3	2	8
HJHMI400/63	63	400	75	90	90	78	3	2	8
HJHMI220/66	66	220	75	90	90	78	3	2	8
HJHMI225/66	66	225	75	90	90	78	3	2	8
HJHMI235/66	66	235	75	90	90	78	3	2	8
HJHMI240/66	66	240	75	90	90	78	3	2	8
HJHMI245/66	66	245	75	90	90	78	3	2	8
HJHMI300/66	66	300	75	90	90	78	3	2	8
HJHMI200/72	72	200	75	90	90	78	3	2	8
HJHMI220/72	72	220	75	90	90	78	3	2	8

References	Dimensions [mm]							Joist Holes	
	A	B	C	D	E	F	t	Ø4x6 Obround	Triangular
HJHMI225/72	72	225	75	90	90	78	3	2	8
HJHMI240/72	72	240	75	90	90	78	3	2	8
HJHMI300/72	72	300	75	90	90	78	3	2	8
HJHMI360/72	72	360	75	90	90	78	3	2	8
HJHMI400/72	72	400	75	90	90	78	3	2	8
HJHMI195/75	75	200	80	110	92.5	83	3	2	8
HJHMI200/75	75	200	80	110	92.5	83	3	2	8
HJHMI220/75	75	220	80	110	92.5	83	3	2	8
HJHMI225/75	75	225	80	110	92.5	83	3	2	8
HJHMI235/75	75	235	80	110	92.5	83	3	2	8
HJHMI240/75	75	240	80	110	92.5	83	3	2	8
HJHMI245/75	75	245	80	110	92.5	83	3	2	8
HJHMI253/75	75	253	80	110	92.5	83	3	2	8
HJHMI300/75	75	300	80	110	92.5	83	3	2	8
HJHMI304/75	75	304	80	110	92.5	83	3	2	8
HJHMI350/75	75	350	80	110	92.5	83	3	2	8
HJHMI360/75	75	360	80	110	92.5	83	3	2	8
HJHMI373/75	75	373	80	110	92.5	83	3	2	8
HJHMI400/75	75	400	80	110	92.5	83	3	2	8
HJHMI417/75	75	417	80	110	92.5	83	3	2	8
HJHMI421/75	75	421	80	110	92.5	83	3	2	8
HJHMI195/78	78	195	80	110	92.5	83	3	2	8
HJHMI200/78	78	200	80	110	92.5	83	3	2	8
HJHMI220/78	78	220	80	110	92.5	83	3	2	8
HJHMI225/78	78	225	80	110	92.5	83	3	2	8
HJHMI235/78	78	235	80	110	92.5	83	3	2	8
HJHMI240/78	78	240	80	110	92.5	83	3	2	8
HJHMI245/78	78	245	80	110	92.5	83	3	2	8
HJHMI300/78	78	300	80	110	92.5	83	3	2	8
HJHMI360/78	78	360	80	110	92.5	83	3	2	8
HJHMI400/78	78	400	80	110	92.5	83	3	2	8
HJHMI195/91	91	195	80	110	92.5	83	3	2	8
HJHMI200/91	91	200	80	110	92.5	83	3	2	8
HJHMI220/91	91	220	80	110	92.5	83	3	2	8
HJHMI225/91	91	225	80	110	92.5	83	3	2	8
HJHMI235/91	91	235	80	110	92.5	83	3	2	8
HJHMI240/91	91	240	80	110	92.5	83	3	2	8
HJHMI245/91	91	245	80	110	92.5	83	3	2	8
HJHMI253/91	91	253	80	110	92.5	83	3	2	8
HJHMI300/91	91	300	80	110	92.5	83	3	2	8
HJHMI350/91	91	350	80	110	92.5	83	3	2	8
HJHMI360/91	91	360	80	110	92.5	83	3	2	8
HJHMI400/91	91	400	80	110	92.5	83	3	2	8
HJHMI195/96	96	195	80	110	92.5	83	3	2	8
HJHMI220/96	96	220	80	110	92.5	83	3	2	8
HJHMI225/96	96	225	80	110	92.5	83	3	2	8
HJHMI235/96	96	235	80	110	92.5	83	3	2	8
HJHMI240/96	96	240	80	110	92.5	83	3	2	8
HJHMI245/96	96	245	80	110	92.5	83	3	2	8
HJHMI300/96	96	300	80	110	92.5	83	3	2	8

C-C-UK-2023 ©2023 SIMPSON STRONG-TIE COMPANY INC.

HJHM/HJHMI Masonry Hangers

SIMPSON Strong-Tie®

Product Dimensions

References	Dimensions [mm]							Joist Holes	
	A	B	C	D	E	F	t	Ø4x6 Obround	Triangular
HJHMI195/99	99	195	80	110	92.5	83	3	2	8
HJHMI200/99	99	200	80	110	92.5	83	3	2	8
HJHMI220/99	99	220	80	110	92.5	83	3	2	8
HJHMI225/99	99	225	80	110	92.5	83	3	2	8
HJHMI235/99	99	235	80	110	92.5	83	3	2	8
HJHMI240/99	99	240	80	110	92.5	83	3	2	8
HJHMI245/99	99	245	80	110	92.5	83	3	2	8
HJHMI253/99	99	253	80	110	92.5	83	3	2	8
HJHMI300/99	99	300	80	110	92.5	83	3	2	8
HJHMI304/99	99	304	80	110	92.5	83	3	2	8
HJHMI350/99	99	350	80	110	92.5	83	3	2	8
HJHMI373/99	99	373	80	110	92.5	83	3	2	8
HJHMI400/99	99	400	80	110	92.5	83	3	2	8
HJHMI417/99	99	417	80	110	92.5	83	3	2	8
HJHMI421/99	99	421	80	110	92.5	83	3	2	8
HJHMI220/109	109	220	80	110	92.5	83	3	2	8
HJHMI225/109	109	225	80	110	92.5	83	3	2	8
HJHMI240/109	109	240	80	110	92.5	83	3	2	8
HJHMI300/109	109	300	80	110	92.5	83	3	2	8
HJHMI200/122	122	200	80	110	92.5	83	3	2	8
HJHMI220/122	122	220	80	110	92.5	83	3	2	8
HJHMI225/122	122	225	80	110	92.5	83	3	2	8
HJHMI240/122	122	240	80	110	92.5	83	3	2	8
HJHMI300/122	122	300	80	110	92.5	83	3	2	8
HJHMI350/122	122	350	80	110	92.5	83	3	2	8
HJHMI360/122	122	360	80	110	92.5	83	3	2	8
HJHMI400/122	122	400	80	110	92.5	83	3	2	8
HJHMI195/125	125	195	80	110	92.5	83	3	2	8
HJHMI200/125	125	200	80	110	92.5	83	3	2	8
HJHMI220/125	125	220	80	110	92.5	83	3	2	8
HJHMI225/125	125	225	80	110	92.5	83	3	2	8
HJHMI253/125	125	253	80	110	92.5	83	3	2	8
HJHMI304/125	125	304	80	110	92.5	83	3	2	8
HJHMI373/125	125	373	80	110	92.5	83	3	2	8
HJHMI417/125	125	417	80	110	92.5	83	3	2	8
HJHMI421/125	125	421	80	110	92.5	83	3	2	8
HJHMI220/128	128	220	80	110	92.5	83	3	2	8
HJHMI225/128	128	225	80	110	92.5	83	3	2	8
HJHMI235/128	128	235	80	110	92.5	83	3	2	8
HJHMI240/128	128	240	80	110	92.5	83	3	2	8
HJHMI245/128	128	245	80	110	92.5	83	3	2	8
HJHMI300/128	128	300	80	110	92.5	83	3	2	8
HJHMI200/142	142	200	80	110	92.5	83	3	2	8
HJHMI220/142	142	220	80	110	92.5	83	3	2	8
HJHMI225/142	142	225	80	110	92.5	83	3	2	8
HJHMI240/142	142	240	80	110	92.5	83	3	2	8
HJHMI300/142	142	300	80	110	92.5	83	3	2	8
HJHMI360/142	142	360	80	110	92.5	83	3	2	8
HJHMI400/142	142	400	80	110	92.5	83	3	2	8
HJHMI195/146	146	195	80	110	92.5	83	3	2	8
HJHMI200/146	146	200	80	110	92.5	83	3	2	8
HJHMI220/146	146	220	80	110	92.5	83	3	2	8
HJHMI225/146	146	225	80	110	92.5	83	3	2	8
HJHMI235/146	146	235	80	110	92.5	83	3	2	8
HJHMI240/146	146	240	80	110	92.5	83	3	2	8

References	Dimensions [mm]							Joist Holes	
	A	B	C	D	E	F	t	Ø4x6 Obround	Triangular
HJHMI245/146	146	245	80	110	92.5	83	3	2	8
HJHMI300/146	146	300	80	110	92.5	83	3	2	8
HJHMI350/146	146	350	80	110	92.5	83	3	2	8
HJHMI360/146	146	360	80	110	92.5	83	3	2	8
HJHMI400/146	146	400	80	110	92.5	83	3	2	8
HJHMI195/150	150	195	80	110	92.5	83	3	2	8
HJHMI200/150	150	200	80	110	92.5	83	3	2	8
HJHMI220/150	150	220	80	110	92.5	83	3	2	8
HJHMI225/150	150	225	80	110	92.5	83	3	2	8
HJHMI235/150	150	235	80	110	92.5	83	3	2	8
HJHMI240/150	150	240	80	110	92.5	83	3	2	8
HJHMI245/150	150	245	80	110	92.5	83	3	2	8
HJHMI253/150	150	253	80	110	92.5	83	3	2	8
HJHMI300/150	150	300	80	110	92.5	83	3	2	8
HJHMI304/150	150	304	80	110	92.5	83	3	2	8
HJHMI360/150	150	360	80	110	92.5	83	3	2	8
HJHMI373/150	150	373	80	110	92.5	83	3	2	8
HJHMI400/150	150	400	80	110	92.5	83	3	2	8
HJHMI417/150	150	417	80	110	92.5	83	3	2	8
HJHMI421/150	150	421	80	110	92.5	83	3	2	8
HJHMI195/182	182	195	80	110	92.5	83	3	2	8
HJHMI200/182	182	200	80	110	92.5	83	3	2	8
HJHMI220/182	182	220	80	110	92.5	83	3	2	8
HJHMI225/182	182	225	80	110	92.5	83	3	2	8
HJHMI235/182	182	235	80	110	92.5	83	3	2	8
HJHMI240/182	182	240	80	110	92.5	83	3	2	8
HJHMI245/182	182	245	80	110	92.5	83	3	2	8
HJHMI253/182	182	253	80	110	92.5	83	3	2	8
HJHMI300/182	182	300	80	110	92.5	83	3	2	8
HJHMI350/182	182	350	80	110	92.5	83	3	2	8
HJHMI360/182	182	360	80	110	92.5	83	3	2	8
HJHMI400/182	182	400	80	110	92.5	83	3	2	8
HJHMI220/196	196	220	80	110	92.5	83	3	2	8
HJHMI225/196	196	225	80	110	92.5	83	3	2	8
HJHMI235/196	196	235	80	110	92.5	83	3	2	8
HJHMI240/196	196	240	80	110	92.5	83	3	2	8
HJHMI245/196	196	245	80	110	92.5	83	3	2	8
HJHMI253/196	196	253	80	110	92.5	83	3	2	8
HJHMI300/196	196	300	80	110	92.5	83	3	2	8
HJHMI350/196	196	350	80	110	92.5	83	3	2	8
HJHMI400/196	196	400	80	110	92.5	83	3	2	8
HJHMI195/246	246	195	80	110	92.5	83	3	2	8
HJHMI200/246	246	200	80	110	92.5	83	3	2	8
HJHMI220/246	246	220	80	110	92.5	83	3	2	8
HJHMI225/246	246	225	80	110	92.5	83	3	2	8
HJHMI253/246	246	253	80	110	92.5	83	3	2	8
HJHMI304/246	246	304	80	110	92.5	83	3	2	8
HJHMI373/246	246	373	80	110	92.5	83	3	2	8
HJHMI195/296	296	195	80	110	92.5	83	3	2	8
HJHMI200/296	296	200	80	110	92.5	83	3	2	8
HJHMI220/296	296	220	80	110	92.5	83	3	2	8
HJHMI225/296	296	225	80	110	92.5	83	3	2	8
HJHMI253/296	296	253	80	110	92.5	83	3	2	8
HJHMI304/296	296	304	80	110	92.5	83	3	2	8

C-C-UK-2023 ©2023 SIMPSON STRONG-TIE COMPANY INC.

RHMSK Skewed Masonry Hanger

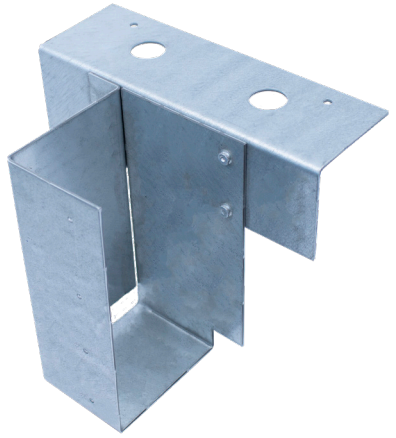

The RHMSK is designed to support solid timber joists, I-Joists or metal web joists from masonry walls.

- Hanger design enables skew angles from 5°-90° left or right.
- Full 90° skew option replaces the trimming detail around soil pipes.

Material: Pre-galvanised mild steel.

How to Order: Specify hanger finished height, width, skew angle and direction.

Example: For joist 200mm deep by 100mm wide with a right directional skew of 45° the code to order would be:

SPEC E RHMSK200/100 SKR45.

STN RECOMMENDED FIXINGS

Product Dimensions

References	Joist [mm]		Dimensions [mm]							Joist Holes
	Width	Height	A	B	C	D	E	t	Skew	Ø4.1
SPEC E RHMSK	61-150	100-400	61-150	100-400	75	240	75	2.5	5 - 85	4
RHMSK90RH	100	100-400	100	100-400	75	240	75	2.5	90	4
RHMSK90LH										

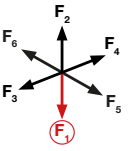

Product Performance

References	Joist Fasteners		Safe Working Loads [kN] $R_{1,SWL}$		Characteristic Capacity [kN] $R_{1,k}$	
	Qty	Type	3.5N/mm² Solid AAC	7.0N/mm² Solid DAC	3.5N/mm² Solid AAC	7.0N/mm² Solid DAC
SPEC E RHMSK	4	N3.75x30	6.5	7.5	13.0	14.0
RHMSK90RH	4	N3.75x30	3.0	3.0	6.0	6.0
RHMSK90LH						

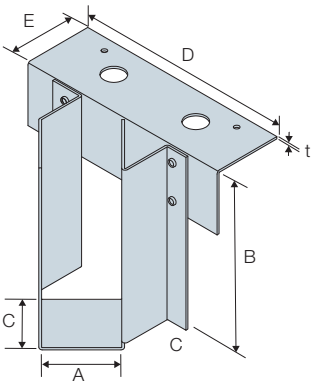

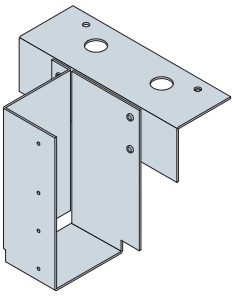

90° Skewed Right

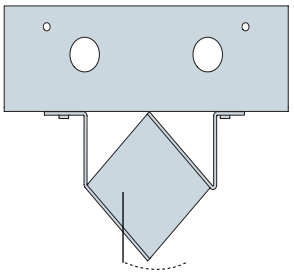

Skewed right 45°

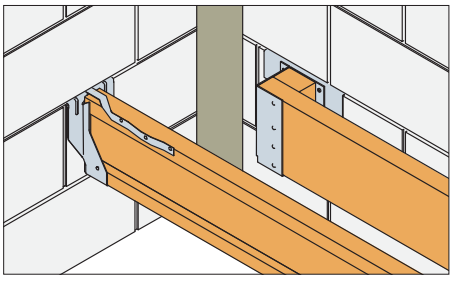

Above left: JHMI supporting an I-Joist.
Above right: RHMSK supporting solid joist at 90° angle to the block wall.

Installation:

Build the masonry to the required level and leave to cure.

- Place hangers onto supporting block work, ensuring the hanger back flange is tight against the face of the block work.
- Continue with masonry above hanger ensuring a minimum of 675mm of masonry is above the hanger top flange and leave to cure. Mortar must be fully cured before any load is applied to the hanger.
- Install the joist into the hanger. The joist should be tight into the back of the hanger. A maximum gap of 6mm is permitted.
- Fix the joist to the hanger using all specified fasteners.
- If installing I-Joists, web stiffeners are required. Web stiffeners should be installed in accordance with I-Joist manufacturers recommendations.
- Where the 90° skewed variant is used to frame around soil vent pipes, a solid blocking piece is to be fitted between the joist and hanger back flange so the joist is positioned 50mm from the face of the masonry wall.
- The blocking piece must be fitted to the joist prior to installing into the hanger. The blocking piece must be the same depth as the joist, the width to suit the remaining gap, and be at least 100mm long.

C-C-UK-2023 ©2023 SIMPSON STRONG-TIE COMPANY INC.

VHJHM Very Heavy Masonry Hanger

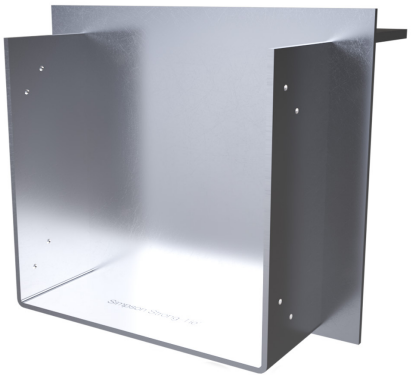

The VHJHM is a heavy duty masonry hanger intended for supporting timber joists, beams and trussed rafters from a padstone in a masonry wall.

- The top flange provides the widest area of contact with the concrete padstone support.
- Superior performance.
- Skewed options available - up to 67.5° left or right.

Material: Mild steel - hot dip galvanised.

How to Order: Specify hanger finished height, width, and if applicable, skew angle and direction.

Example: For joist 200mm deep by 100mm wide with a right directional skew of 45°, the code to order would be:

SPEC E VHJHM200/100 SKR45.

Product Dimensions

Reference	Dimensions [mm]							Joist Holes
	A	B	C	D	E	t_1	t_2	Ø6
SPEC E VHJHM	75 - 300	100 - 450	100	330	75	8.0	5.0	8

Performance Values

Reference	Joist Fasteners		Safe Working Loads [kN]	Characteristic Capacity [kN]
			$R_{1,SWL}$	$R_{1,k}$
	Qty	Type	C30 Concrete Padstone	C30 Concrete Padstone
SPEC E VHJHM	8	N3.75x30	58.0	101.0

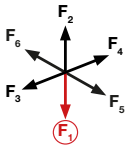

Installation:

- The hanger top flange should be positioned centrally along the length of the concrete padstone. The padstone should be a minimum of 600mm long.
- Set the hanger back flange tight against the block wall when built to desired level, then continue with additonal courses to complete wall height. Joist should be tight into the back of the hanger. Maximum gap permitted is 6mm.
- Use all specified fasteners.
- MINIMUM 3 COURSES OF SOLID BLOCK (675MM MASONRY) REQUIRED ABOVE HANGER, WITH MORTAR FULLY CURED, BEFORE APPLYING LOAD.
- Do not stack blocks or heavy loads on the joists during construction unless the joists have additonal support to take the full load of the blocks vertically and horizontally.

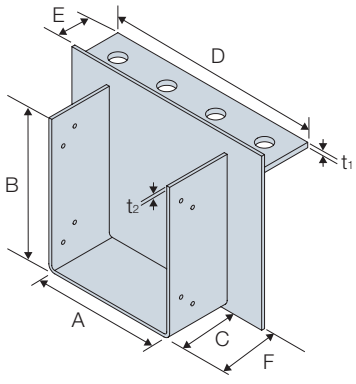

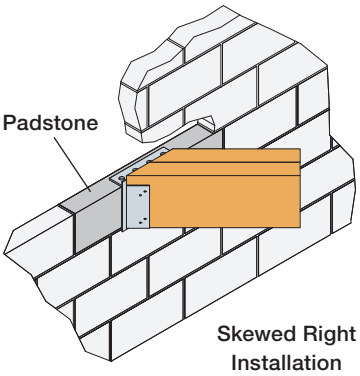

Skewed Right Installation

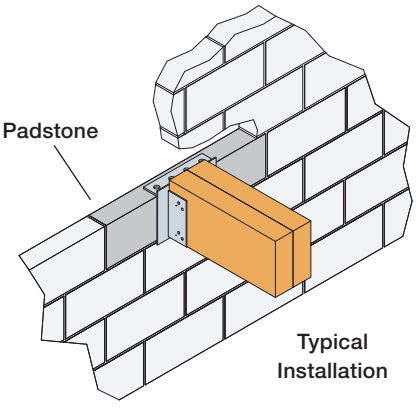

Typical Installation

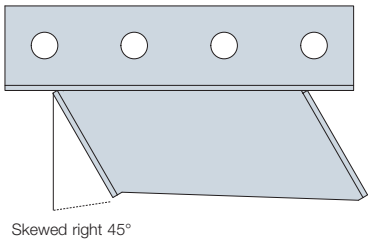

VHJHM Top View Skewed Right

C-C-UK-2023 ©2023 SIMPSON STRONG-TIE COMPANY INC.

SES Simpson End Seal

Simpson End Seal: One solution for air leakage and sound transference requirements. The SES Simpson End Seal provides a fast and effective solution to reduce air leakage through 'pocket masonry' in block walls. Once installed, it removes the need for mastic sealant around the perimeter of joists (subject to good workmanship when mortar keying).

The SES is a cost effective way to help comply with the requirements of Part L (reduced air leakage) and Part E (reduced sound transference).

The SES allows for a full 100mm bearing of joist onto masonry walls.

- Air leakage - reduces air leakage without the need for mastic sealant.
- Sound - meets the sound requirements of a proprietary joist cap as specified by Appendix A, Robust Details Part E Handbook.
- Fire - provides 1 hour of fire resistance (in compliance with Approved Document B part of the building regulations).
- Can be used on external and party walls.
- Meets the NHBC Technical requirements.
- Secure fixing - provided by 30mm square twist nails.

Material: Pre-galvanised mild steel.

STN RECOMMENDED FIXINGS

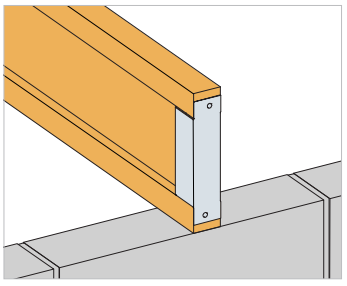

Step 1: Prepare block work to accept floor joists - no need for mortar on top. Position floor joists onto wall (only one joist shown for clarity). Fit the End Seal to the end of the joist as shown. Ensure that the End Seal is tight against the joist end and secure with 2 No 3.75x30 square twist nails.

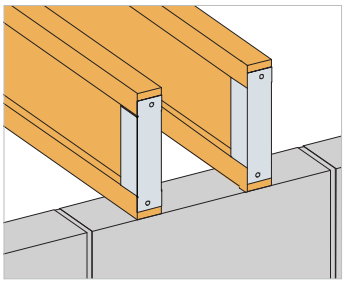

Step 2: When preparing a double joist, repeat installation step 1 on the second I-Joist.

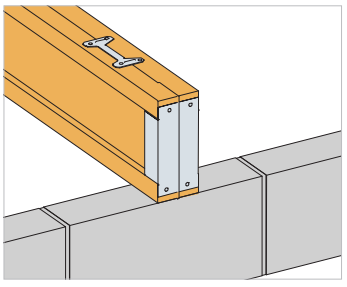

Step 3: Join the I-Joists together, use mastic or expanding foam between the two joists to ensure air tight seal. It is recommended that the I-Joists are joined together using 2 MJC (multi joist connector), one on top and one on the bottom of the I-Joist at 200mm from the bearing point (SDW screws can be used as an alternative to MJC). Check with I-Joist manufacturer.

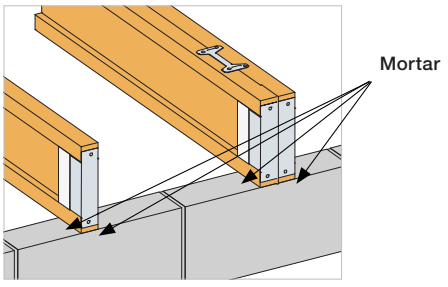

Step 4: Apply mortar to the void between the top and bottom chords of the I-Joist on both sides of a single joist and to the outsides of a double joist, ensuring the mortar is packed against the End Seal.

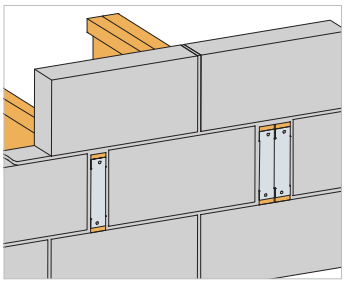

Step 5: Lay a bed of mortar onto the top of the blocks ensuring mortar is laid tight up against the joist end. Lay blocks either side of the joist, ensuring mortar is applied to the block ends, completely fill all joints.

Lay the next bed of mortar on top of the blocks. Continue to build the wall as normal.

C-C-UK-2023 ©2023 SIMPSON STRONG-TIE COMPANY INC.

SES Simpson End Seal

Product Dimensions

I-Joist Manufacturer	I-Joist	Dimensions [mm]			References	Product Dimensions [mm]		
		Height	Width	Flange Depth		A	B	E
James Jones	JJI 195/47-45	195	47	45	SES101/45	45	157	101
	JJI 220/47-45	220	47	45	SES122/45	45	178	122
	JJI 235/47-45	235	47	45	SES138/45	45	194	138
	JJI240/47-45	240	47	45	SES138/45	45	194	138
	JJI 245/47-45	245	47	45	SES151/45	45	207	151
	JJI 300/47-45	300	47	45	SES202/45	45	258	202
	JJI 220/63-45	220	63	45	SES122/60	60	178	122
	JJI 235/63-45	235	63	45	SES138/60	60	194	138
	JJI240/63-45	240	63	45	SES138/60	60	194	138
	JJI 245/63-45	245	63	45	SES151/60	60	207	151
	JJI 300/63-45	300	63	45	SES202/60	60	258	202
	JJI 220/72-45	220	72	45	SES122/69	69	178	122
	JJI 235/72-45	235	72	45	SES138/69	69	194	138
	JJI 245/72-45	245	72	45	SES151/69	69	207	151
	JJI 300/72-45	300	72	45	SES202/69	69	258	202
	JJI 220/97-45	220	97	45	SES122/90	90	178	122
	JJI 235/97-45	235	97	45	SES138/90	90	194	138
	JJI240/97-45	240	97	45	SES138/90	90	194	138
	JJI 245/97-45	245	97	45	SES151/90	90	207	151
	JJI 300/97-45	300	97	45	SES202/90	90	258	202
	JJI 350/97-45	350	97	45	SES252/90	90	308	252
	JJI 400/97-45	400	97	45	SES302/90	90	358	302

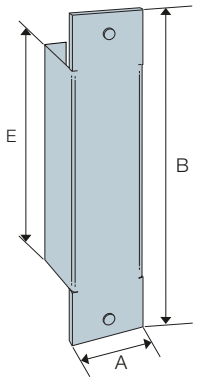

Product Dimensions

I-Joist Manufacturer	I-Joist	Dimensions [mm]			References	Product Dimensions [mm]		
		Height	Width	Flange Depth		A	B	E
Masonite	M 220/47-47	220	47	47	SES122/45	45	178	122
	M 240/47-47	240	47	47	SES138/45	45	194	138
	M 300/47-47	300	47	47	SES202/45	45	258	202
	M 220/60-47	220	60	47	SES122/60	60	178	122
	M 240/60-47	240	60	47	SES138/60	60	194	138
	M 300/60-47	300	60	47	SES202/60	60	258	202
	M 350/60-47	350	60	47	SES252/60	60	308	252
	M 400/60-47	400	60	47	SES302/60	60	358	302
	M 220/70-47	220	70	47	SES122/69	69	178	122
	M 240/70-47	240	70	47	SES138/69	69	194	138
	M 300/70-47	300	70	47	SES202/69	69	258	202
	M 220/97-47	220	97	47	SES122/90	90	178	122
	M 240/97-47	240	97	47	SES138/90	90	194	138
	M 300/97-47	300	97	47	SES202/90	90	258	202
	M 350/97-47	350	97	47	SES252/90	90	308	252
	M 400/97-47	400	97	47	SES302/90	90	358	302

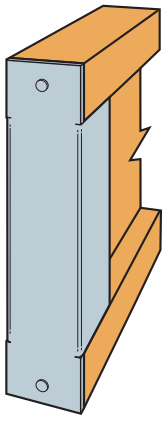

C-C-UK-2023 ©2023 SIMPSON STRONG-TIE COMPANY INC.

SES Simpson End Seal

Product Dimensions

I-Joist Manufacturer	I-Joist	Dimensions [mm]			References	Product Dimensions [mm]		
		Height	Width	Flange Depth		A	B	E
Metsawood	FJI 220/45-36	220	45	36	SES138/45	45	194	138
	FJI 240/45-36	240	45	36	SES151/45	45	207	151
	FJI 300/45-36	300	45	36	SES218/45	45	274	218
	FJI 220/53-36	220	53	36	SES138/45	45	194	138
	FJI 240/53-36	240	53	36	SES151/45	45	207	151
	FJI 300/53-36	300	53	36	SES218/45	45	274	218
	FJI 220/69-36	220	69	36	SES138/69	69	194	138
	FJI 240/69-36	240	69	36	SES151/69	69	207	151
	FJI 300/69-36	300	69	36	SES218/69	69	274	218
	FJI 200/45-39	200	45	39	SES112/45	45	168	112
	FJI 360/45-39	360	45	39	SES272/45	45	328	272
	FJI 400/45-39	400	45	39	SES312/45	45	368	312
	FJI 200/58-39	200	58	39	SES112/58	58	168	112
	FJI 360/58-39	360	58	39	SES272/58	58	328	272
	FJI 400/58-39	400	58	39	SES312/58	58	368	312
	FJI 200/69-39	200	69	39	SES112/69	69	168	112
	FJI 220/69-39	220	69	39	SES132/69	69	188	132
	FJI 240/69-39	240	69	39	SES152/69	69	208	152
	FJI 300/69-39	300	69	39	SES212/69	69	268	212
	FJI 360/69-39	360	69	39	SES272/69	69	328	272
	FJI 400/69-39	400	69	39	SES312/69	69	368	312
	FJI 200/89-39	200	89	39	SES112/90	90	168	112
	FJI 360/89-39	360	89	39	SES272/90	90	328	272
	FJI 400/89-39	400	89	39	SES312/90	90	368	312
	FJI 220/96-39	220	96	39	SES138/90	90	194	138
	FJI 240/96-39	240	96	39	SES151/90	90	207	151
	FJI 300/96-39	300	96	39	SES218/90	90	274	218

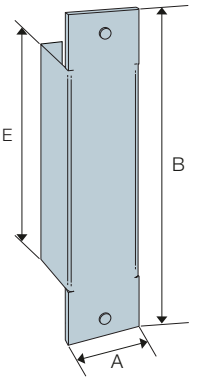

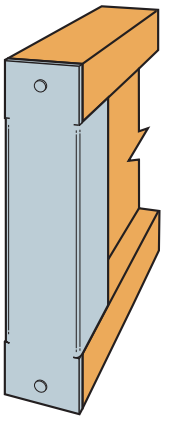

Product Dimensions

I-Joist Manufacturer	I-Joist	Dimensions [mm]			References	Product Dimensions [mm]		
		Height	Width	Flange Depth		A	B	E
Steico	S 200/45-39	200	45	39	SES118/45	45	174	118
	S 220/45-39	220	45	39	SES138/45	45	194	138
	S 240/45-39	240	45	39	SES151/45	45	207	151
	S 300/45-39	300	45	39	SES218/45	45	274	218
	S 360/45-39	360	45	39	SES278/45	45	334	278
	S 400/45-39	400	45	39	SES318/45	45	374	318
	S 200/60-39	200	60	39	SES118/60	60	174	118
	S 220/60-39	220	60	39	SES138/60	60	194	138
	S 240/60-39	240	60	39	SES151/60	60	207	151
	S 300/60-39	300	60	39	SES218/60	60	274	218
	S 360/60-39	360	60	39	SES278/60	60	334	278
	S 400/60-39	400	60	39	SES318/60	60	374	318
	S 200/90-39	200	60	39	SES118/90	90	174	118
	S 220/90-39	220	60	39	SES138/90	90	194	138
	S 240/90-39	240	60	39	SES151/90	90	207	151
	S 300/90-39	300	60	39	SES218/90	90	274	218
	S 360/90-39	360	60	39	SES278/90	90	334	278
	S 400/90-39	400	60	39	SES318/90	90	374	318

C-C-UK-2023 ©2023 SIMPSON STRONG-TIE COMPANY INC.

ICF Insulated Concrete Form Ledger System

The ICFLC and ICFVL-CW ledger connector system is engineered to solve the challenges of mounting steel or wood ledgers on insulated concrete walls.

The ledger connector system is easy, quick and versatile to use.
The perforations in the embedded leg of the ICFLC permit the concrete to flow around it, anchoring the ICFLC securely within the wall. The exposed flange provides a structural surface for mounting either a wood or a steel ledger.

Material: Pre-galvanised mild steel.

General Notes:

- Spacings shown apply to vertical loads only.
- No load duration increase is allowed.
- Minimum concrete grade C20/25.
- Do not splice ledger at ICFLC location.
- ICFVL-CW and ICFLC sold separately.

Product Dimensions

References	Dimensions [mm]				Joist Holes
	A	B	C	D	Ø6.3
ICFLC	57	264	151	2.0	-
ICFVL-CW	178	184	46	1.6	8

WARNING: Industry studies show that hardened fasteners can experience performance problems in wet environments. Accordingly, use this product in dry, interior applications only.

Product Values ICFLC and ICFVL-CW

Ledger Type	Ledger Thickness [mm]	Maximum Connector Spacings [mm]	Fasteners	Safe Working Loads [kN] Download
Timber	45	1200	8 x ICF - D3.25[1]	8.5
Steel	1.6	350	4 x #14 x 3/4" [2][3]	7.3

1. Screws provided.
2. 1/4 x 3/4" drill point screws not provided.
3. Minimum screw shear capacity is 3.3kN.
4. Minimum timber ledger is C16. Steel ledger specification A653SS Grade 50.
5. Maximum ICF foam thickness is 80mm.

- Attach interior partition walls with suitable drill point screws into ICFLC where needed.
- Use ICFLC to connect to the concrete wall through the ICF.
- Use ICFVL-CW to attach ledger to ICF wall.
- Use a face fix hanger for I-Joist floor system.

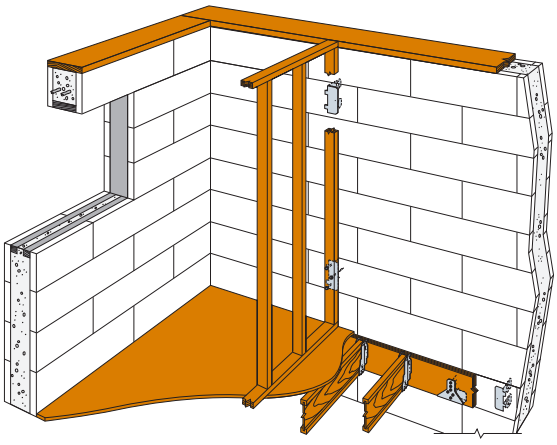

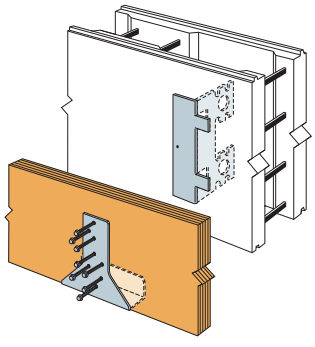

Screw through the ICFVL-CW and ledger board into the ICFLC

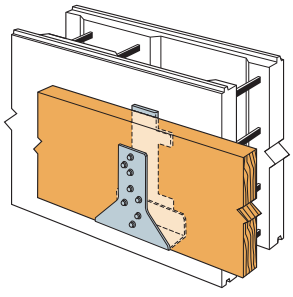

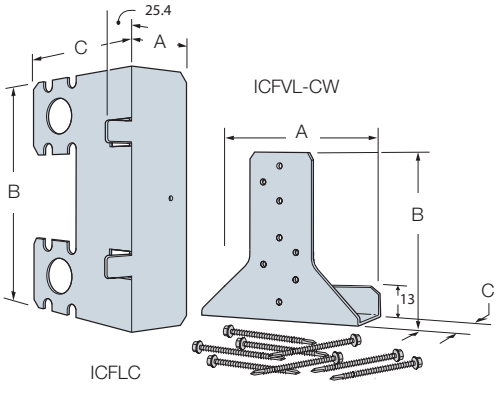

C-C-UK-2023 ©2023 SIMPSON STRONG-TIE COMPANY INC.

JHA Joist Hanger with Adjustable Height Strap

The JHA is a height adjustable joist hanger for supporting timber joists from timber members.

- A galvanised joist hanger that provides great support with ease of installation.
- Published performance values are based upon 3.75 x 30mm square twist nails being used throughout.
- Wider strap provides more surface area on the supporting timber and allows increased nail spacing, enhancing the performance of the critical hanger-to-support part of the connection.
- Minimum and maximum nailing schedules are stamped into the strap providing correct installation information for site operatives.
- Speed-prongs hold the hanger in position to allow easier attachment. The installer no longer has to try to hold hanger, joist and nail with one hand and swing a hammer with the other!
- JHA270 range features a location tab which allows easier alignment of the hanger.
- The model number and size is stamped into the seat of the hanger for easy identification, even after installation.

Material: Pre-galvanised mild steel.

Installation: Alternative installation methods are available depending on the availability of nailing surface.

Maximum Nailing: All nails must be applied according to the table.

Minimum Nailing: For a lower installed cost, the minimum nailing schedule can be used. A minimum wrap over of 45mm is required.

Loft Conversions (JHA450 range): For applications where the hanger extends below the support.

A minimum wrap over of 45mm is required or maximum nailing.

Options: Because these hangers are fully die-formed they cannot be modified.

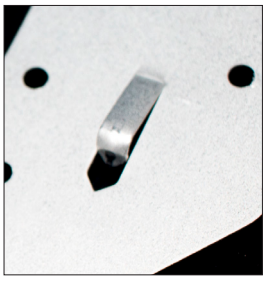

Speed Prongs (JHA270)

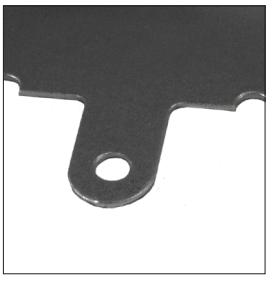

Location Tab (JHA270)

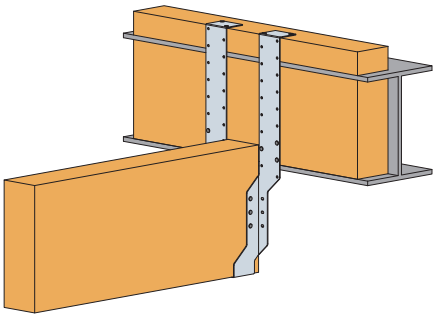

JHA450 Below Support Wrap Over Installation

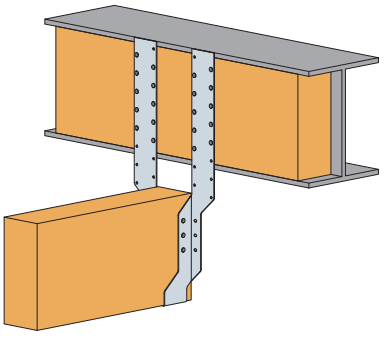

JHA450 Underslung Face Fix Installation

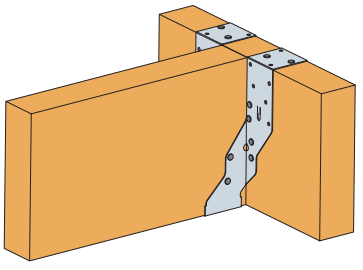

JHA270 Wrap Over Installation

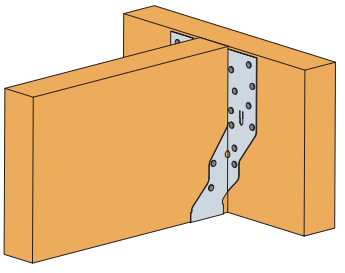

JHA270 Face Fix Installation

C-C-UK-2023 ©2023 SIMPSON STRONG-TIE COMPANY INC.

JHA Joist Hanger with Adjustable Height Strap

SIMPSON Strong-Tie

Product Dimensions

References	Dimensions [mm]							Header Holes	Joist Holes
	A	B	C	D	E	F	t	Ø4	Ø6x4 Oblong
JHA270/38	38	241	50	49	106	52	0.9	22	4
JHA270/44	44	238	50	49	103	52	0.9	22	4
JHA270/47	47	237	50	49	102	52	0.9	24	4
JHA270/50	50	235	50	49	100	52	0.9	24	4
JHA270/63	63	249	50	49	114	52	0.9	22	4
JHA270/75	75	243	50	49	108	52	0.9	22	4
JHA270/91	91	234	50	49	100	52	0.9	22	4
JHA270/100	100	230	50	49	95	52	0.9	22	4
JHA450/38	38	481	50	52	191	62	1.5	38	6
JHA450/44	44	478	50	52	188	62	1.5	38	6
JHA450/47	47	477	50	52	187	62	1.5	38	6
JHA450/50	50	475	50	52	185	62	1.5	38	6
JHA450/63	63	469	50	52	179	62	1.5	38	6
JHA450/75	75	463	50	52	173	62	1.5	38	6
JHA450/91	91	455	50	52	165	62	1.5	38	6
JHA450/100	100	450	50	52	160	62	1.5	38	6
JHA450/125	125	453	63	52	163	65	1.5	38	6
JHA450/137	137	447	63	52	157	65	1.5	38	6
JHA450/150	150	440	63	52	150	65	1.5	38	6

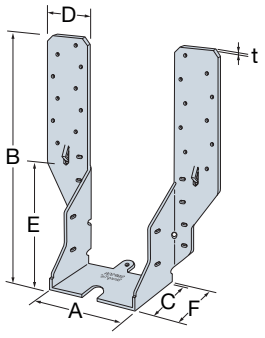

Performance Values

References	Installation	Header Member Depth [mm]	Fasteners			Safe Working Loads [kN]			Characteristic Capacities [kN]	
			Header Qty		Joist	$R_{1,SWL,Long\ term}$	$R_{1,SWL,Med\ Term}$	$R_{2,SWL,Short\ Term}$	$R_{1,K}$	$R_{2,K}$
			Face	Top	Qty	N3.75x30	N3.75x30	N3.75x30	N3.75x30	N3.75x30
JHA270/38	Wrap Over	125 - 200	8	4	4	4.2	4.8	1.1	10.0	2.1
JHA270/38	Face Fix	200 - 250	20	-	4	3.2	3.6	1.1	7.6	2.1
JHA270/44	Wrap Over	125 - 200	8	4	4	4.8	5.5	1.1	11.6	2.1
JHA270/44	Face Fix	200 - 250	20	-	4	3.2	3.6	1.1	7.6	2.1
JHA270/47	Wrap Over	125 - 200	8	4	4	5.2	5.9	1.1	12.4	2.1
JHA270/47	Face Fix	200 - 250	20	-	4	3.2	3.6	1.1	7.6	2.1
JHA270/50-100	Wrap Over	125 - 200	8	4	4	5.5	6.2	1.1	13.1	2.1
JHA270/50-100	Face Fix	200 - 250	20	-	4	3.2	3.6	1.1	7.6	2.1
JHA450/38	Wrap Over	200 - 300	8	4	6	4.2	4.8	1.6	10.0	3.1
JHA450/38	Face Fix	200 - 300	20	-	6	4.2	4.8	1.6	10.0	3.1
JHA450/44	Wrap Over	200 - 300	8	4	6	4.8	5.5	1.6	11.6	3.1
JHA450/44	Face Fix	200 - 300	20	-	6	4.4	5.1	1.6	10.6	3.1
JHA450/47	Wrap Over	200 - 300	8	4	6	5.2	5.9	1.6	12.4	3.1
JHA450/47	Face Fix	200 - 300	20	-	6	4.4	5.1	1.6	10.6	3.1
JHA450/50-100	Wrap Over	200 - 300	8	4	6	5.5	6.3	1.6	13.2	3.1
JHA450/50-100	Face Fix	200 - 300	20	-	6	4.4	5.1	1.6	10.6	3.1
JHA450/125-150	Wrap Over	175 - 300	8	4	6	5.7	6.5	1.6	13.6	3.1
JHA450/125-150	Face Fix	175 - 300	20	-	6	4.8	5.5	1.6	11.6	3.1
JHA450/(38-100)	Below Support	175 - 300	4	4	6	4.0	4.6	-	9.6	-
JHA450/(38-100)	Below Support	175 - 300	20	-	6	4.0	4.6	-	9.6	-
JHA450/(125-150)	Below Support	175 - 300	4	4	6	4.2	4.8	-	10.1	-
JHA450/(125-150)	Below Support	175 - 300	20	-	6	4.2	4.8	-	10.1	-

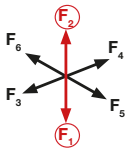

C-C-UK-2023 ©2023 SIMPSON STRONG-TIE COMPANY INC.

IUC Concealed Flange Face Fix Hanger

The IUC is a face mounted concealed flange hanger for solid timber sections or engineered joists.

Material: Pre-galvanised mild steel.

Installation: Use all specified fasteners (see table below). Verify that the header can take the fasteners specified in the table. Web stiffeners are not required with I-Joists when the top flange is laterally supported by both sides of the hanger. The hanger depth should be at least 60% of the joist depth to prevent rotation, unless additional restraint is added to the top of the joist.

Options: These hangers cannot be skewed but will normally accommodate a skew of up to 5°. For concealed flange hangers with widths greater than 91mm see SAI hanger catalogue page.

RWN RECOMMENDED FIXINGS

STN RECOMMENDED FIXINGS

Product Dimensions

References	Hanger Dimensions (mm)						Header Holes	Joist Holes	
	A	B	C	D	F	t	Ø4	Ø6x4 Oblong	Triangular
IUC142/40	40	142	51	19	57	1.2	6	2	6
IUC192/40	40	192	51	19	57	1.2	10	2	6
IUC217/40	40	217	51	19	57	1.2	12	2	6
IUC142/47	47	142	51	19	57	1.2	6	2	6
IUC192/47	47	192	51	19	57	1.2	10	2	6
IUC217/47	47	217	51	19	57	1.2	12	2	6
IUC192/50	50	192	51	19	57	1.2	10	2	6
IUC217/50	50	217	51	19	57	1.2	12	2	6
IUC192/53	53	192	51	19	57	1.2	10	2	6
IUC217/53	53	217	51	19	57	1.2	12	2	6
IUC192/61	61	192	51	19	57	1.2	10	2	6
IUC217/61	61	217	51	19	57	1.2	12	2	6
IUC192/66	66	192	51	19	57	1.2	10	2	6
IUC217/66	66	217	51	19	57	1.2	12	2	6
IUC192/72	72	192	51	19	57	1.2	10	2	6
IUC217/72	72	217	51	19	57	1.2	12	2	6
IUC192/75	75	192	51	19	57	1.2	10	2	6
IUC217/75	75	217	51	19	57	1.2	12	2	6
IUC192/91	91	192	51	19	57	1.2	10	2	6
IUC217/91	91	217	51	19	57	1.2	12	2	6

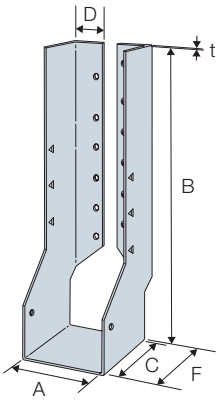

C-C-UK-2023 ©2023 SIMPSON STRONG-TIE COMPANY INC.

IUC Concealed Flange Face Fix Hanger

Performance Values

References	Fasteners		Safe Working Loads [kN]			Characteristic Capacities [kN]		
	Header	Joist	$R_{1,k}$ C16 or I Joist Header	$R_{1,k}$ C24 or LVL Header	$R_{2,K\ Short\ Term}$	$R_{1,k}$ C16 or I Joist Header	$R_{1,k}$ C24 or LVL Header	$R_{2,k}$
	Qty	Qty	N3.75x30	N3.75x30	N3.75x30	N3.75x30	N3.75x30	N3.75x30
IUC142	6	2	2.1	2.4	0.9	3.8	8.1	1.8
IUC192	10	2	3.5	4.1	0.9	7.5	13.5	1.8
IUC217	12	2	4.2	4.9	0.9	10.0	16.2	1.8

Performance Values

References	Fasteners		Safe Working Loads [kN]			Characteristic Capacities [kN]		
	Header	Joist	$R_{1,k}$ C16 or I Joist Header	$R_{1,k}$ C24 or LVL Header	$R_{2,k\ Short\ Term}$	$R_{1,k}$ C16 or I Joist Header	$R_{1,k}$ C24 or LVL Header	$R_{2,k}$
	Qty	Qty	N3.75x75	N3.75x75	N3.75x30	N3.75x75	N3.75x75	N3.75x30
IUC142	6	2	2.6	3.0	0.9	7.9	10.7	1.8
IUC192	10	2	4.3	5.0	0.9	13.1	17.8	1.8
IUC217	12	2	5.1	5.9	0.9	15.7	21.4	1.8

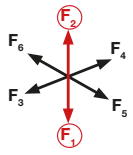

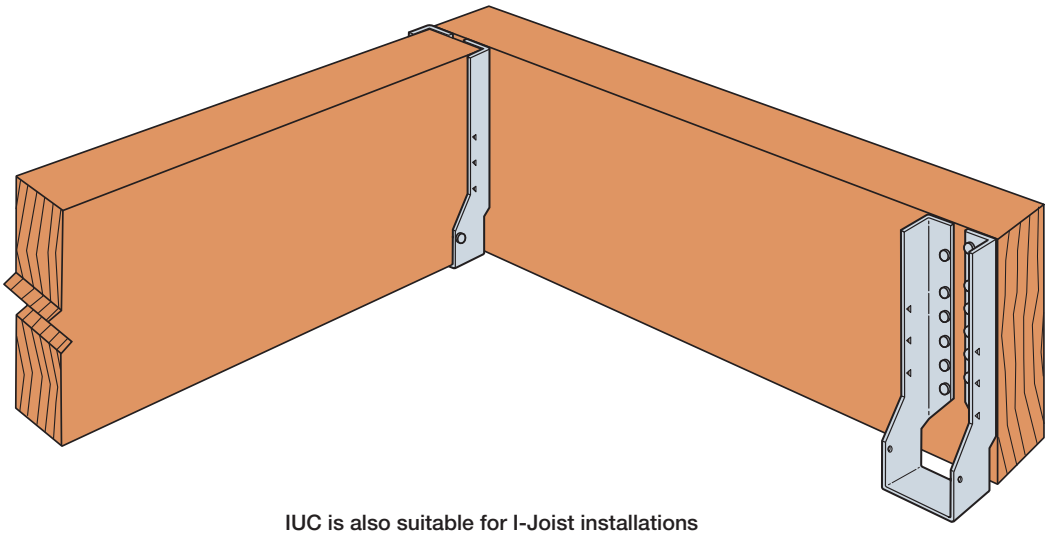

IUC is also suitable for I-Joist installations provided backer blocks are used.

C-C-UK-2023 ©2023 SIMPSON STRONG-TIE COMPANY INC.

SAE/SAI Face Fix Hangers

The SAE and SAI ranges are heavy-duty hangers designed for timber to timber applications requiring additional strength.

- The hanger depth should be at least 60% of the joist depth to prevent rotation, unless additional lateral restraint is added to the top of the joist.
- SAE timber bolted capacity to be determined according to the relevant standards.
- SAI hangers are not recommended for bolted applications.
- SAI minimum width is 91mm. For small widths of internal flange hangers see IUC.

Material: Pre-galvanised mild steel.

STN RECOMMENDED FIXINGS

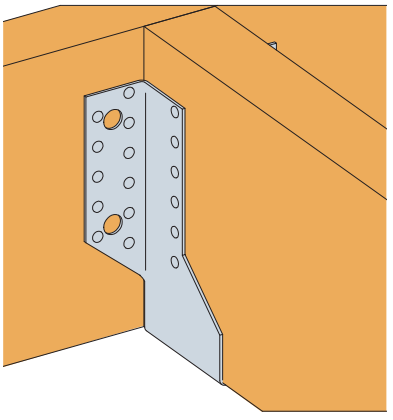

Typical SAE Installation

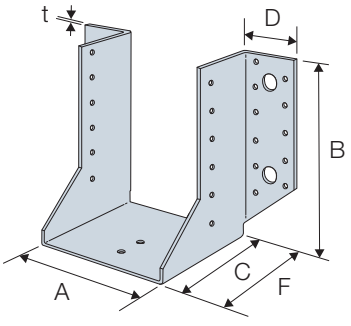

SAE

Product Dimensions

References	Hanger Dimensions (mm)						Header Holes			Joist Holes
	A	B	C	D	F	t	Ø5	Ø11	Ø13	Ø5
SAE200/38/2	38	81	84	42	86	2	8	2	-	5
SAE250/38/2	38	106	84	42	86	2	12	2	-	7
SAE380/38/2/25	38	171	84	42	86	2	20	-	4	10
SAE500/38/2	38	231	84	42	86	2	32	-	6	16
SAE600/38/2	38	281	88	36	90	2	36	-	4	20
SAE200/40/2	40	80	84	42	86	2	8	2	-	5
SAE250/40/2	40	105	84	42	86	2	12	2	-	7
SAE380/40/2/25	40	170	84	42	86	2	20	-	4	10
SAE500/40/2	40	230	84	42	86	2	32	-	6	16
SAE600/40/2	40	280	88	36	90	2	36	-	4	20
SAE200/47/2	47	77	88	42	90	2	8	2	-	5
SAE250/47/2	47	102	88	42	90	2	12	2	-	7
SAE380/47/2/25	47	167	84	42	86	2	20	-	4	10
SAE500/47/2	47	227	84	42	86	2	32	-	6	16
SAE600/47/2	47	277	88	36	90	2	36	-	4	20
SAE200/50/2	50	75	84	42	86	2	8	2	-	5
SAE250/50/2	50	100	84	42	86	2	12	2	-	7
SAE380/50/2/25	50	165	84	42	86	2	20	-	4	10
SAE500/50/2	50	225	84	42	86	2	32	-	6	16
SAE600/50/2	50	275	88	36	90	2	36	-	4	20
SAE380/56/2/25	56	162	84	42	86	2	20	-	4	10
SAE500/56/2	56	222	84	42	86	2	32	-	6	16
SAE600/56/2	56	272	88	36	90	2	36	-	4	20
SAE380/63/2/25	63	159	84	42	86	2	20	-	4	10
SAE500/63/2	63	219	84	42	86	2	32	-	6	16
SAE600/63/2	63	269	88	36	90	2	36	-	4	20
SAE380/66/2/25	66	157	84	42	86	2	20	-	4	10
SAE500/66/2	66	217	84	42	86	2	32	-	6	16
SAE600/66/2	66	267	88	36	90	2	36	-	4	20
SAE380/72/2/25	72	154	84	42	86	2	20	-	4	10

C-C-UK-2023 ©2023 SIMPSON STRONG-TIE COMPANY INC.

SAE/SAI Face Fix Hangers

Product Dimensions

References	Hanger Dimensions (mm)						Header Holes			Joist Holes
	A	B	C	D	F	t	Ø5	Ø11	Ø13	Ø5
SAE500/72/2	72	214	84	42	86	2	32	-	6	16
SAE600/72/2	72	264	88	36	90	2	36	-	4	20
SAE250/75/2	75	88	84	42	86	2	8	2	-	5
SAE380/75/2/25	75	153	84	42	86	2	20	-	4	10
SAE500/75/2	75	213	84	42	86	2	32	-	6	16
SAE600/75/2	75	263	88	36	90	2	36	-	4	20
SAE380/78/2/25	78	151	84	42	86	2	20	-	4	10
SAE500/78/2	78	211	84	42	86	2	32	-	6	16
SAE600/78/2	78	261	88	36	90	2	36	-	4	20
SAE380/91/2/25	91	145	84	42	86	2	20	-	4	10
SAE500/91/2	91	205	84	42	86	2	32	-	6	16
SAE600/91/2	91	255	88	36	90	2	36	-	4	20
SAE380/96/2/25	96	142	84	42	86	2	20	-	4	10
SAE500/96/2	96	202	84	42	86	2	32	-	6	16
SAE600/96/2	96	252	88	36	90	2	36	-	4	20
SAE380/99/2/25	99	141	84	42	86	2	20	-	4	10
SAE500/99/2	99	201	84	42	86	2	32	-	6	16
SAE600/99/2	99	251	88	36	90	2	36	-	4	20
SAE380/109/2/25	109	136	84	42	86	2	20	-	4	10
SAE500/109/2	109	196	84	42	86	2	32	-	6	16
SAE600/109/2	109	246	88	36	90	2	36	-	4	20
SAE500/118/2	118	191	84	42	86	2	32	-	6	16
SAE600/118/2	118	241	88	36	90	2	36	-	4	20
SAE500/122/2	122	189	84	42	86	2	32	-	6	16
SAE600/122/2	122	239	88	36	90	2	36	-	4	20
SAE500/125/2	125	188	84	42	86	2	32	-	6	16
SAE600/125/2	125	238	88	36	90	2	36	-	4	20
SAE500/128/2	128	186	84	42	86	2	32	-	6	16
SAE600/128/2	128	236	88	36	90	2	36	-	4	20
SAE500/135/2	135	183	84	42	86	2	32	-	6	16
SAE600/135/2	135	233	88	36	90	2	36	-	4	20
SAE500/142/2	142	179	84	42	86	2	32	-	6	16
SAE600/142/2	142	229	88	36	90	2	36	-	4	20
SAE500/146/2	146	177	84	42	86	2	32	-	6	16
SAE600/146/2	146	227	88	36	90	2	36	-	4	20
SAEL500/150/2	150	175	84	42	86	2	32	-	6	16
SAE600/150/2	150	225	88	36	90	2	36	-	4	20
SAE500/182/2	182	175	84	42	86	2	30	-	6	16
SAE600/182/2	182	220	88	36	90	2	36	-	4	20
SAE720/182/2	182	269	75	38	77	2	38	-	6	20
SAE600/196/2	196	220	88	42	90	2	36	-	4	20
SAE720/196/2	196	262	75	38	77	2	38	-	6	20
SAE590/200/2	200	195	88	42	90	2	30	-	6	20
SAE690X	200 - 300	195	88	42	90	2	30	-	6	20

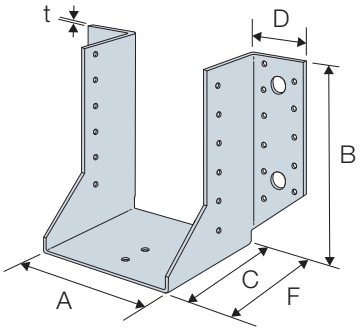

SAE

C-C-UK-2023 ©2023 SIMPSON STRONG-TIE COMPANY INC.

SAE/SAI Face Fix Hangers

Performance Values

References	Fasteners		Safe Working Loads [kN]			Characteristic Capacities [kN]		
	Header	Joist	$R_{1,SWL}$ C16 or I Joist Header	$R_{1,SWL}$ C24 or LVL Header	$R_{2,SWL,Short\ Term}$	$R_{1,k}$, C16 or I Joist Header	$R_{1,k}$, C24 or LVL Header	$R_{2,k}$
	Qty	Qty	N3.75x30	N3.75x30	N3.75x30	N3.75x30	N3.75x30	N3.75x30
SAE200	8	5	3.2	3.4	2.1	7.6	8.1	4.2
SAE250	12	7	5.3	5.6	3.0	12.7	13.5	5.9
SAE380	20	10	7.6	8.1	4.2	18.2	19.4	8.5
SAE500	32	16	13.9	14.8	6.1	33.3	35.6	12.2
SAE600	36	20	17.6	18.8	8.4	42.2	45.1	15.9
SAE720	38	20	18.6	19.8	8.4	44.6	47.6	16.7
SAE590	30	20	10.7	13.2	8.4	25.8	26.5	16.7
SAE690X	30	20	10.7	13.2	8.4	25.8	26.5	16.7

SAE(X) Made to Order Specials Performance Values

References	Dimensions [mm]			Fasteners		Safe Working Load [kN]
	A	B	C	Header	Joist	$R_{1,SWL,Long\ Term}$ C16 Header
				Qty	Qty	N3.75x30
SAE250X	40-76	87 -105	64	6	4	2.3
SAE380X	38-100	140 - 175	64	14	6	5.4
SAE500X	38-150	175 - 235	64	18	8	6.9
SAE600X	38-150	235 - 290	64	28	10	10.8
SAE720X	40-182	269 - 340	64	28	10	10.8

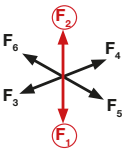

1. These hangers are based upon Composite Wood style SAE hangers and contain round and triangular nail holes only. ie. No Bolt Holes.
2. SWL's are based upon a maximum nailing schedule—all round and triangular holes filled.
3. Skews right or left up to 67.5° and slopes up or down up to 45°. For combined skew and sloped hangers the maximum SWL is 80% of the stated loads.
4. Enables hangers to be manufactured for any combination of widths and heights listed for a model number.
5. To order specify model number, width, height, skew and/or slope.eg SAE380/63 Skewed Right at 15° becomes SAE380X, W = 63, H = 159, SKR = 15° (for no skewed/sloped options please specify skew = 0° & slope = 0°).

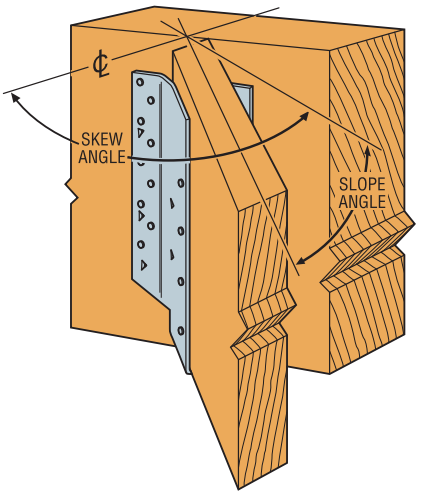

Typical SAE(X) Sloped down, skewed right installation (no bolt holes)

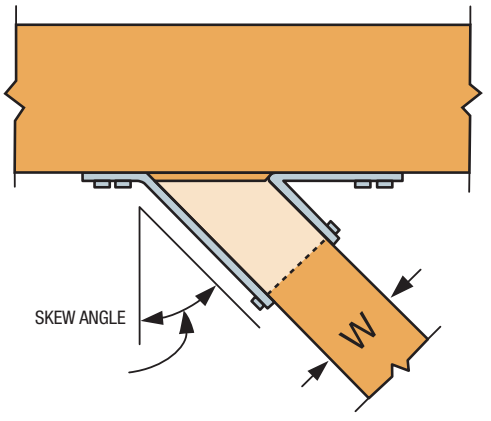

Top view SAE(X) Hanger Skewed right (no bolt holes)

C-C-UK-2023 ©2023 SIMPSON STRONG-TIE COMPANY INC.

SAE/SAI Face Fix Hangers

SIMPSON Strong-Tie

Product Dimensions

References	Hanger Dimensions (mm)						Header Holes		Joist Holes
	A	B	C	D	F	t	Ø5	Ø13	Ø5
SAI380/91/2	91	145	76	34	82	2	20	4	10
SAI500/91/2	91	205	76	34	82	2	32	6	16
SAI600/91/2	91	265	90	38	94	2	36	4	20
SAI380/99/2	99	141	76	34	82	2	20	4	10
SAI500/99/2	99	201	76	34	82	2	32	6	16
SAI600/99/2	99	251	90	38	94	2	36	4	20
SAI500/118/2	118	191	76	34	82	2	32	6	16
SAI600/118/2	118	241	90	38	94	2	36	4	20
SAI500/125/2	125	188	76	34	82	2	32	6	16
SAI600/125/2	125	238	90	38	94	2	36	4	20
SAI500/150/2	150	175	76	34	82	2	32	6	16
SAI600/150/2	150	225	90	38	94	2	36	4	20
SAI600/182/2	182	220	90	38	94	2	36	4	20
SAI720/182/2	182	269	72	40	76	2	38	8	20
SAI600/196/2	196	220	90	38	94	2	36	4	20
SAI720/196/2	196	262	72	40	76	2	38	8	20
SAI590/200/2	200	195	78	42	84	2	30	6	20
SAI690X	200 - 300	195	78	42	84	2	30	6	20

Performance Values

References	Fasteners		Safe Working Loads [kN]			Characteristic Capacities [kN]		
	Header	Joist	$R_{1,SWL}$ C16 or I Joist Header	$R_{1,SWL}$ C24 or LVL Header	$R_{2,SWL,Short\ Term}$	$R_{1,k}$ C16 or I Joist Header	$R_{1,k}$ C24 or LVL Header	$R_{2,k}$
	Qty	Qty	N3.75x30	N3.75x30	N3.75x30	N3.75x30	N3.75x30	N3.75x30
SAI380	20	10	7.6	8.1	4.2	18.2	19.4	8.5
SAI500	32	16	13.9	14.8	6.1	33.3	35.6	12.2
SAI600	36	20	17.6	18.8	8.4	42.2	45.1	15.9
SAI720	38	20	18.6	19.8	8.4	44.6	47.6	16.7
SAI590	30	20	10.7	13.2	8.4	25.8	26.5	16.7
SAI690X	30	20	10.7	13.2	8.4	25.8	26.5	16.7

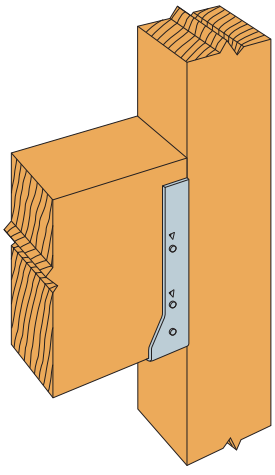

SAI fixed to timber post

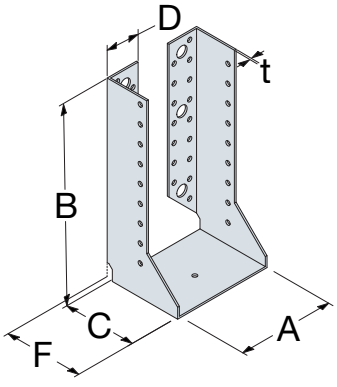

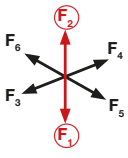

C-C-UK-2023 ©2023 SIMPSON STRONG-TIE COMPANY INC.

MHA Mini Hanger

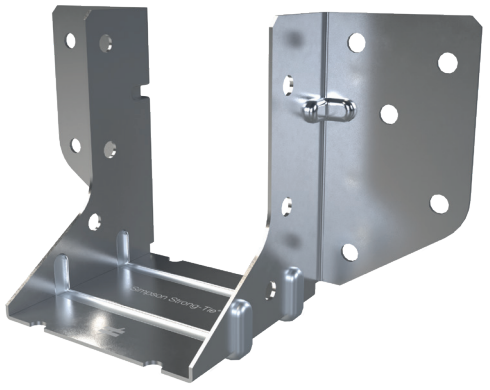

The MHA is a galvanised hanger available in a range of widths for small timber sections and timber members; such as trimmers and ceiling joists.

Material: Pre-galvanised mild steel.

Installation: For solid header fill all nail holes. For I-Joist headers fill the bottom two nail holes on each side.

- Hanger depth should be at least 60% of carried member depth to prevent rotation. If less than 60%, then additional lateral restraint to the top of the carried member is required.

STN RECOMMENDED FIXINGS

Product Dimensions

References	Dimensions [mm]				Header Holes	Joist Holes
	A	B	C	t	Ø4.1	Ø4.1
MHA38	38	66	45	0.8	10	6
MHA47	47	62	45	0.8	10	6
MHA50	50	60	45	0.8	10	6

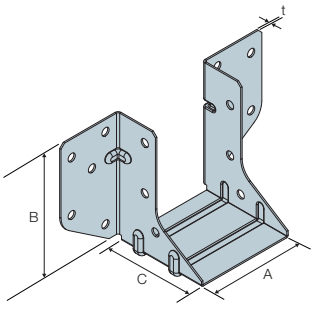

Performance Values - Solid Sawn

References	Fasteners		Safe Working Loads [kN]				Characteristic Capacities [kN]			
			$R_{1,SWL,Long\ Term}$			$R_{2,SWL,Short\ Term}$	$R_{1.k}$			$R_{2.k}$
	Header Qty	Joist Qty	C16 Header	C24 Header	TR26 Header	C16 Joist	C16 Header	C24 Header	TR26 Header	C16 Joist
			N3.75x30	N3.75x30	N3.75x30	N3.75x30	N3.75x30	N3.75x30	N3.75x30	N3.75x30
MHA38	10	6	3.4	3.7	3.8	1.3	8.1	8.8	9.2	2.5
MHA47	10	6	3.4	3.7	3.8	1.3	8.1	8.8	9.2	2.5
MHA50	10	6	3.4	3.7	3.8	1.3	8.1	8.8	9.2	2.5

Performance Values - I-Joists (based on a pair)

References	Header Holes	Joist Holes	Safe Working Loads [kN]				Characteristic Capacities [kN]			
			$R_{1,SWL,Long\ Term}$		$R_{2,SWL,Short\ Term}$		$R_{1.k}$		$R_{2.k}$	
	Ø4.1	Ø4.1	C24 Flanges	LVL Flanges	C24 Flanges	LVL Flanges	C24 Flanges	LVL Flanges	C24 Flanges	LVL Flanges
			N3.75x30	N3.75x30	N3.75x30	N3.75x30	N3.75x30	N3.75x30	N3.75x30	N3.75x30
MHA38	8	8	1.6	1.5	2.0	1.8	3.9	3.5	3.9	3.5
MHA47	8	8	1.6	1.5	2.0	1.8	3.9	3.5	3.9	3.5
MHA50	8	8	1.6	1.5	2.0	1.8	3.9	3.5	3.9	3.5

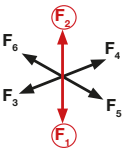

C-C-UK-2023 ©2023 SIMPSON STRONG-TIE COMPANY INC.

MHA Mini Hanger

Solid Headers

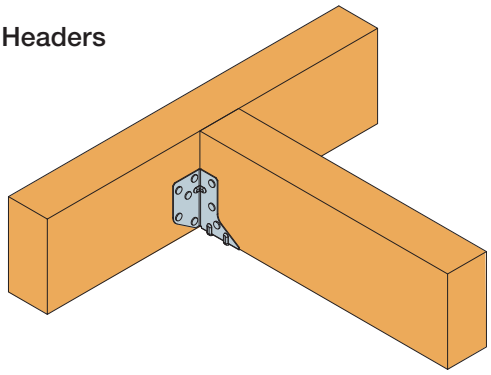

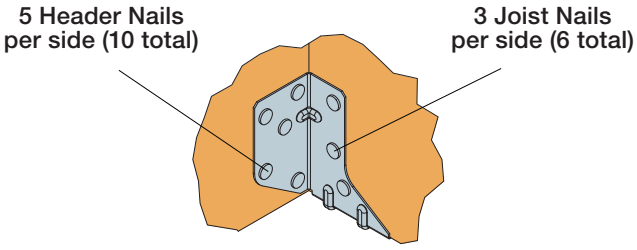

I-Joist Headers

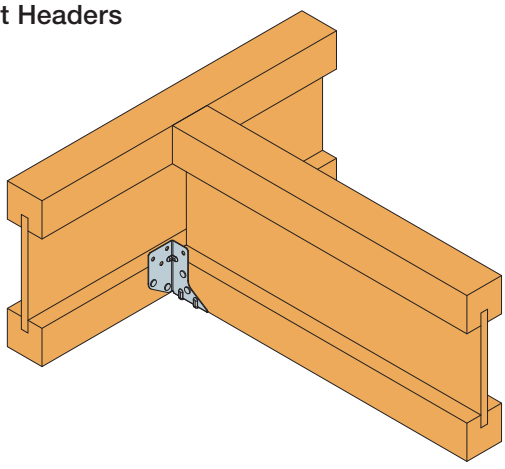

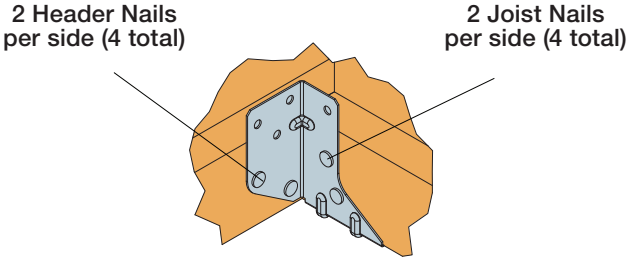

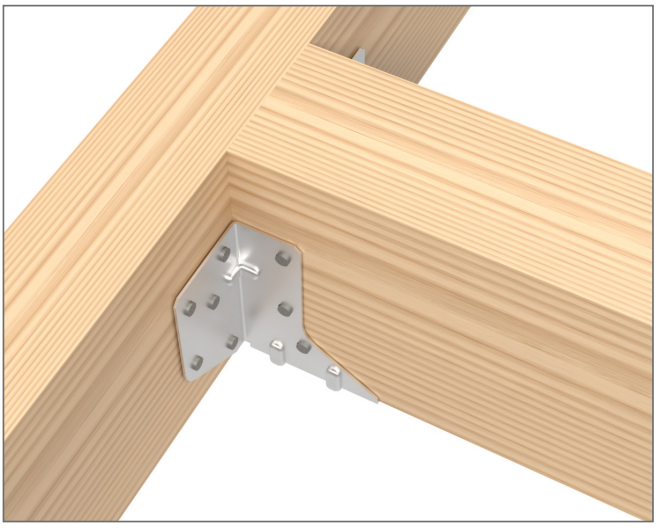

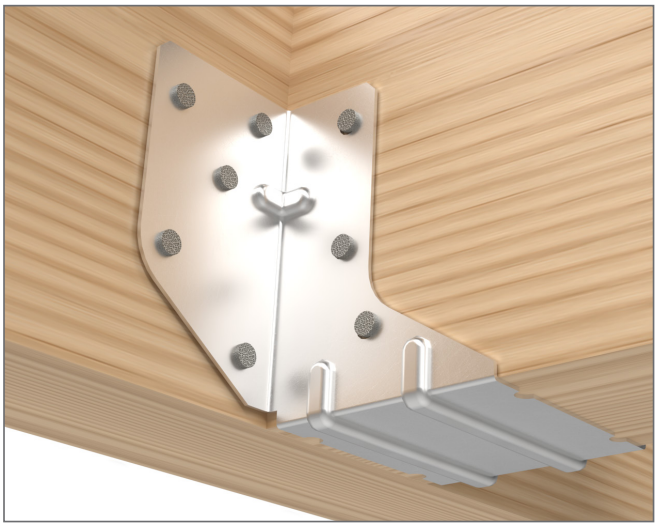

C-C-UK-2023 ©2023 SIMPSON STRONG-TIE COMPANY INC.

ET Skewed 45° Hanger

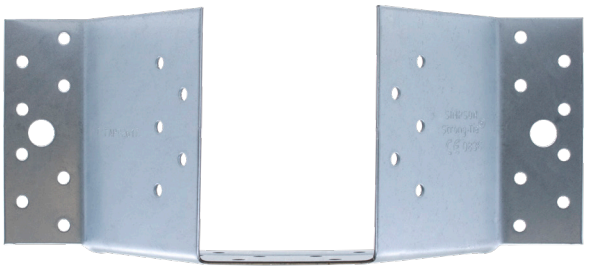

The ET is used for supporting skewed timber joists from timber members. This range is tested and standardised with a 45° skew angle left or right.

Material: Pre-galvanised mild steel.

Installation: Use all specified fasteners. See General Notes.

Verify that the header can take the required fasteners specified in the table.

CNA RECOMMENDED FIXINGS

Product Dimensions

References	Joist Size [mm]			Dimensions [mm]						Header Holes [mm]		Joist Holes [mm]
	Width	Height										
		Min	Max.	A	B	C	D	F	t	Ø5	Ø11	Ø5
ET248	38	97	145	59	92	65	189	46	1.5	14	2	6
ET260	47	97	145	67	95	55	177	35	1.5	16	2	10
ET301	2x38	97	145	108	95	55	218	35	1.5	16	2	16

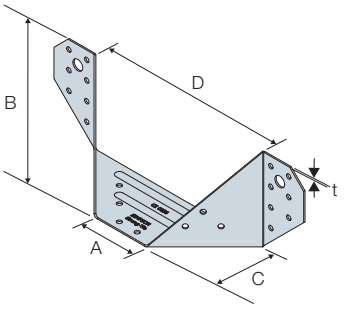

Performance Values

References	Fasteners		Safe Working Loads [kN]	Characteristic Capacities [kN]
			$R_{1,SWL,Long\ Term}$ C24 Timber	$R_{1,k}$ C24 Timber
	Header Qty	Joist Qty	CNA4.0x35	CNA4.0x35
ET248	14	6	3.6	8.8
ET260	16	10	4.4	10.6
ET301	16	16	4.7	11.3

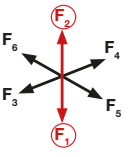

• Use an LS skewable angle for extra stability if the joist height exceeds 195mm.

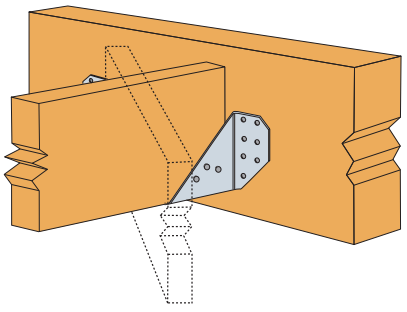

ET248

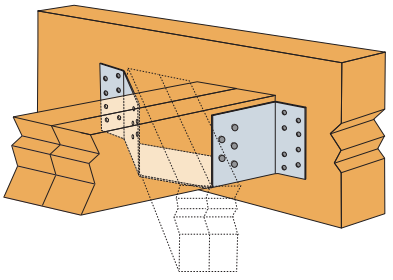

ET301

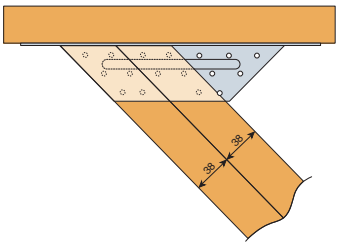

ET301 - Plan view

C-C-UK-2023 ©2023 SIMPSON STRONG-TIE COMPANY INC.

SDE Width Adjustable Face Fix Hanger

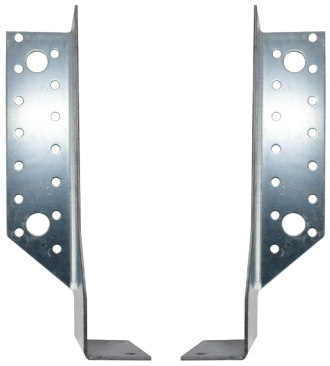

The SDE is a two piece, width adjustable face fix hanger. The two separate components that make up the SDE system can be adjusted to suit a range of joist widths between 60mm to 250mm. Each SDE is supplied as a pair. Optional bolt holes (13mm diameter).

Material: Pre-galvanised mild steel.

Installation: Use all fasteners as specified in the table below. Check that the header can accomodate the fasteners specified. Each SDE piece must also be nailed through the holes underneath the joist.

RWN RECOMMENDED FIXINGS

STN RECOMMENDED FIXINGS

Product Dimensions

References	Joise Size [mm]				Dimensions [mm]						Header Holes [mm]		Joist Holes [mm]
	Width		Height										
	Min	Max.	Min	Max.	A	B	C	D	F	t	Ø5	Ø13	Ø5
SDE300/30	60	250	120	177	60-250	118	84	42	86	2	18	4	14
SDE340/30	60	250	140	207	60-250	138	84	42	86	2	22	4	16
SDE380/30	60	250	160	237	60-250	158	84	42	86	2	22	4	16
SDE440/30	60	250	190	282	60-250	188	84	42	86	2	28	4	20

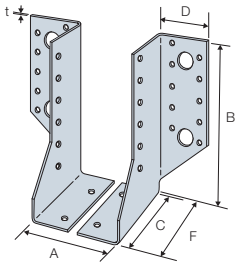

Performance Values (based on a pair)

References	Fasteners		Safe Working Loads [kN]		Characteristic Capacities [kN]	
			$R_{2,SWL,Long\ Term}$ C24Header	$R_{2,\ Short\ Term}$	$R_{1,k}$ C24 Header	$R_{2,k}$
	Header Qty	Joist Qty	N3.75x30	N3.75x30	N3.75x30	N3.75x30
SDE300/30	18	14	1.3	2.3	3.0	4.5
SDE340/30	22	16	1.6	3.2	3.9	6.3
SDE380/30	22	16	4.8	3.2	11.5	6.3
SDE440/30	28	20	6.0	4.7	14.3	9.4

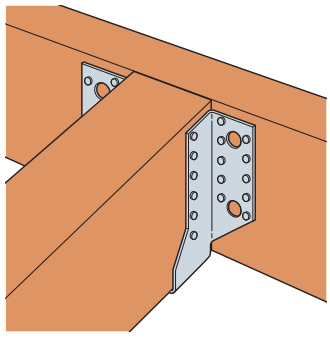

Performance Values (based on a pair)

References	Fasteners		Safe Working Loads [kN]		Characteristic Capacities [kN]	
			$R_{1,SWL,Long\ Term}$ C24 Header	$R_{2,SWL,Short\ Term}$	$R_{1,k}$ C24 Header	$R_{2,k,}$
	Header Qty	Joist Qty	N4.0x100	N3.75x30	N4.0x100	N3.75x30
SDE300/30	18	14	4.0	4.8	9.6	9.6
SDE340/30	22	16	4.8	5.8	11.5	11.5
SDE380/30	22	16	4.8	5.8	11.5	11.5
SDE440/30	28	20	6.0	7.2	14.3	14.3

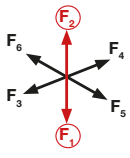

C-C-UK-2023 ©2023 SIMPSON STRONG-TIE COMPANY INC.

TU Concealed Beam Hanger

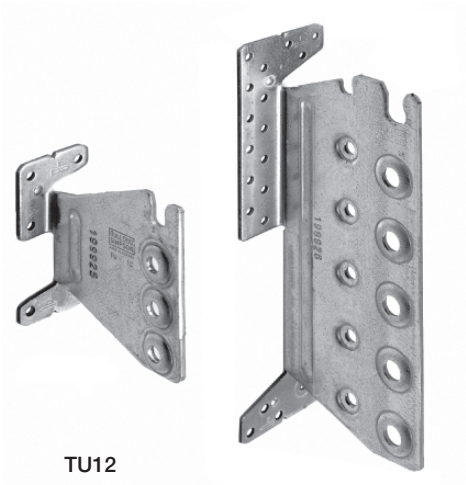

TU12

The TU galvanised steel, load rated hanger provides an aesthetically attractive connection for exposed beams. Mild steel dowels and screws are included.

Material: Pre-galvanised mild steel.

Dowels: Mild steel electroplated zinc coating.

Installation:

- Dowels aligned across the grain may cause splitting if the wood shrinks excessively. Use only in glulam, composite timber or well dried timber. Verify that the header can take the required fasteners specified in the table.
- Attach to the supporting beam with CSA 5.0 x 40mm screws (supplied).
- Specify dowel length and TU size to fit the application.
- Preparation of carried beam is best done off-site with cutting and boring tools.
- Holes in beam should be same diameter as dowel to ensure tight fit.
- Centre the TU within height of carried beam.
- Centre dowels within the width of the carried member
- For a sloped installation the TU hanger remains as standard and the timber is cut and angled to suit the slope.
- Recommended for internal dry environments (service class 1 & 2) only.

Options:

- The standard installation will leave a 5mm gap between carried and supporting beams.
- Pocket installation gives a fully concealed connection.
- Skewed installation up to 60°. Sloped installation maximum 45°.
- Options: Skewed TU available. (To be factory ordered.)
- Additional screws are available to order.

Product Dimensions

References	Joist Size [mm]					Hanger Dimensions [mm]				Header Holes [mm]	Joist Holes [mm]	
	Width		Height									
	Min	Max.	Min Slope = 0	Min Slope > 0	Max.	A	B	C	t	Ø5	Ø8.5	Ø12.5
TU12	60	120	120	160	200	96	98	40	3	6	4	-
TU16	60	160	160	190	240	134	105	60	3	18	-	3
TU20	60	160	200	225	280	174	105	60	3	22	-	4
TU24	60	160	240	260	300	214	105	60	3	26	-	5
TU28	60	160	280	295	340	254	105	60	3	30	-	6

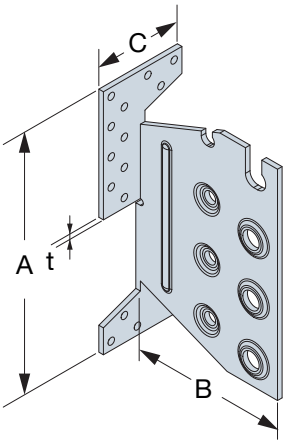

Performance Values – Standard Installation – Slope = 0°, Skew = 0°

References	Fasteners				Characteristic Capacities – Timber C24 [kN]											
	Header		Joist													
	Qty	Screw	Qty	Dowel	$R_{1,k}$				$R_{2,k}$				$R_{3,k} = R_{4,k}$			
					Dowel Length [mm]				Dowel Length [mm]				Dowel Length [mm]			
					60	80	100	120	60	80	100	120	60	80	100	120
TU12	6	CSA5.0x40	4	STD8	8.1	9.0	10.1	10.7	6.1	6.8	7.6	8.0	1.2	1.7	2.2	2.8
TU16	18	CSA5.0x40	3	STD12	17.5	18.1	19.2	20.5	11.7	12.1	12.8	13.7	1.6	2.2	2.9	3.6
TU20	22	CSA5.0x40	4	STD12	26.7	27.6	29.2	31.1	20.0	20.7	21.9	23.3	2.2	2.9	3.8	4.6
TU24	26	CSA5.0x40	5	STD12	36.6	37.7	39.8	42.5	29.3	30.2	31.8	34.0	2.7	3.6	4.7	5.8
TU28	30	CSA5.0x40	6	STD12	46.9	48.3	50.9	54.1	39.1	40.3	42.4	45.1	3.2	4.4	5.5	6.7

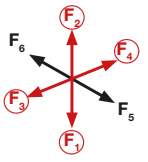

Performance Values – Sloped Installation – Slope up to 45°, Skew = 0°

References	Fasteners				Characteristic Capacities – Timber C24 [kN]											
	Header		Joist													
	Qty	Screw	Qty	Dowel	$R_{1,k}$ Slope β=15°				$R_{1,k}$ Slope β=30°				$R_{1,k}$ Slope β=45°			
					Dowel Length [mm]				Dowel Length [mm]				Dowel Length [mm]			
					60	80	100	120	60	80	100	120	60	80	100	120
TU12	6	CSA5.0x40	4	STD8	8.1	9.0	10.1	10.7	8.1	9.0	10.1	10.7	8.1	9.0	10.1	10.7
TU16	18	CSA5.0x40	3	STD12	16.9	17.4	18.3	19.4	16.5	16.8	17.5	18.5	15.9	16.4	17.0	17.9
TU20	22	CSA5.0x40	4	STD12	25.8	26.4	27.8	29.5	25.1	25.6	26.7	28.1	24.4	25.1	26.1	27.4
TU24	26	CSA5.0x40	5	STD12	35.4	36.2	38.0	40.2	34.3	35.2	36.6	38.6	33.6	34.7	36.0	37.8
TU28	30	CSA5.0x40	6	STD12	45.5	46.4	48.6	51.4	44.0	45.3	47.1	49.5	43.4	44.9	46.5	48.7

C-C-UK-2023 ©2023 SIMPSON STRONG-TIE COMPANY INC.

TU Concealed Beam Hanger

SIMPSON Strong-Tie

Performance Values – Skewed Only: Skewed & Sloped Installation – Skew up to 60°, Slope up to 45°

References	Fasteners				Characteristic Capacities – Timber C24 [kN]															
	Header		Joist		$R_{1,k}$ Slope β=0°				$R_{1,k}$ Slope β=15°				$R_{1,k}$ Slope β=30°				$R_{1,k}$ Slope β=45°			
	Qty	Screw	Qty	Dowel	Dowel Length [mm]				Dowel Length [mm]				Dowel Length [mm]				Dowel Length [mm]			
					60	80	100	120	60	80	100	120	60	80	100	120	60	80	100	120
TU/S12	6	CSA5.0x40	4	STD8	7,4	8,2	9,1	9,6	7,2	7,9	8,7	9,3	6,9	7,5	8,2	9,0	6,6	7,1	7,8	8,5
TU/S16	18	CSA5.0x40	3	STD12	16,4	16,9	17,8	19,0	15,9	16,3	17,1	18,1	15,4	15,7	16,4	17,2	15,0	15,4	15,9	16,7
TU/S20	22	CSA5.0x40	4	STD12	25,0	25,8	27,2	28,9	24,2	24,8	25,9	27,4	23,6	24,0	25,0	26,2	22,9	23,5	24,4	25,5
TU/S24	26	CSA5.0x40	5	STD12	34,4	35,4	37,3	39,5	33,3	34,1	35,6	37,6	32,4	33,1	34,4	36,1	31,6	32,6	33,7	35,2
TU/S28	30	CSA5.0x40	6	STD12	44,3	45,5	47,8	50,6	43,0	43,8	45,8	48,2	41,7	42,7	44,3	46,5	40,9	42,2	43,7	45,6

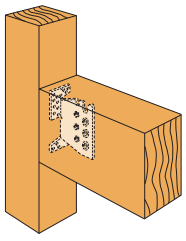

Beam-to-Post

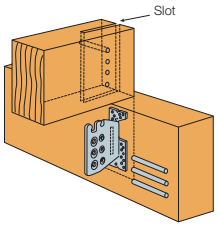

Beam-to-Beam

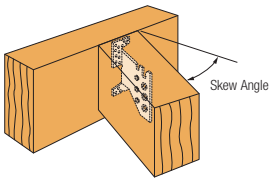

Skewed Beam-to-Beam

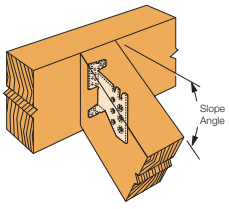

Sloped Beam-to-Beam

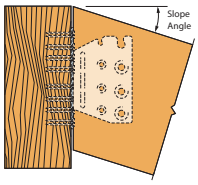

Sloped Beam-to-Beam

Installation Procedure for a TU Concealed Connector:

ATTACH CONNECTOR TO HEADER

- Position the connector at the pre-determined height and screw the connector to the header or post.
- Fill all holes with screws supplied.

PREPARE THE BEAM

- Cut the beam to the length specified.
- Cut a slot into the end of the beam. Slot width for TU12 is 6mm and 9mm for all other sizes.
- Cut the slot 3mm deeper than the TU and short of the beam height for concealed installation. This allows the connector to be hidden from below. Otherwise cut the slot 3mm deeper than the TU and through the entire beam height.
- Fully concealed only: Rout a pocket into the beam end. The pocket should be 6mm deep, enough to hide the thickness of the TU and the screw heads. This eliminates the gap between the beam & header (see Pocket Concealed Installation example below).

DRILL BEAM DOWEL HOLES

- Using the TU as a template, mark the hole positions, remove the TU and drill the holes.
- Drill the dowel holes to the required diameter. Dowel hole diameter for the TU12 is 8mm and 12mm for all other sizes.

INSTALL BEAMS

- Install top dowel into the carried beam first. Slip beam into place and install the remaining dowels working from the top downwards.
- Fully concealed only: To hide exposed dowel holes when the installation is complete, glue and plug the holes.

Standard Installation

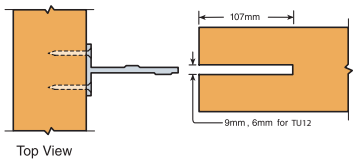

Top View

Cut a slot into the end of the beam

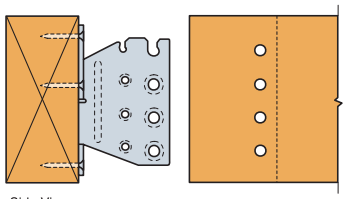

Side View

Pocket (Concealed) Installation

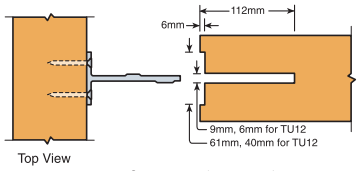

Top View

Cut a slot and rout a pocket into the end of the beam

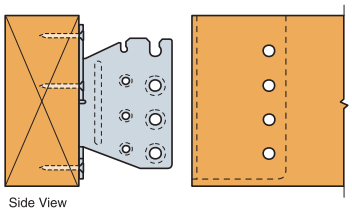

Side View

Performance Values – Rotated Installation

References	Fasteners				Characteristic Capacities – Timber C24 [kN]			
	Header		Joist		Dowel Length [mm]			
	Qty	Screw	Qty	Dowel	60	80	100	120
TU12	6	CSA5.0x40	4	STD8	1.5	2.0	2.5	3.0
TU16	18	CSA5.0x40	3	STD12	2.0	2.6	3.3	4.0
TU20	22	CSA5.0x40	4	STD12	2.7	3.5	4.4	5.1
TU24	26	CSA5.0x40	5	STD12	3.4	4.4	5.3	6.4
TU28	30	CSA5.0x40	6	STD12	4.3	5.3	6.4	7.7

- Lateral loads can only be applied to connections with no slope or skew.
- The following design check must be completed if combined loads are applied at the same time.

$$\left(\frac{F_{1,d}}{R_{1,d}}\right)^2 + \left(\frac{F_{2,d}}{R_{2,d}}\right)^2 + \left(\frac{F_{3,d}}{R_{3,d}}\right)^2 \leq 1$$

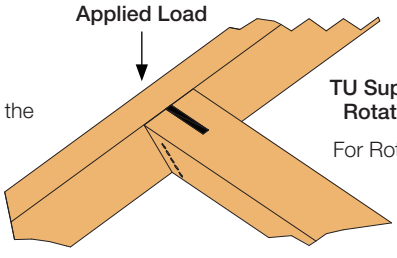

TU Supporting Timber Rotated About Axis

For Rotated Installation

C-C-UK-2023 ©2023 SIMPSON STRONG-TIE COMPANY INC.

CBH Concealed Beam Hanger

The CBH hanger is a development of the TU range. It allows for a concealed timber to timber, concrete to timber or masonry to timber connection. CBH can be face fixed or pocketed onto timber headers.

Material: Pre-galvanised mild steel.

Note: Nails and dowels included. Anchors for concrete or masonry applications are not included. Please specify the length of the dowel when ordering.

Product Dimensions

References	Joist Size [mm]					Hanger Dimensions [mm]				Header Holes		Joist Holes
	Height	Width	Height									
	Min	Min	Min Slope=0	Min Slope>0	Max.	A	B	C	t	Ø11	Ø5	Ø10.5
CBH150/2.5	192	60	190	219	225	150	114	60	2,5	2	14	5
CBH180/2.5	222	60	220	249	270	180	114	60	2,5	2	16	6
CBH220/2.5	262	60	250	279	330	220	114	60	2,5	2	22	7

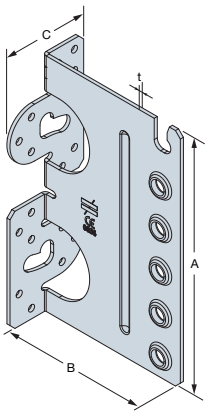

Performance Values – Timber to Timber Connection

References	Fasteners				Characteristic Capacities – Timber C24 [kN]											
					$R_{1,k}$ Slope β=0°						$R_{1,k}$ Slope β>0°					
	Header		Joist		Dowels length [mm]						Dowels length [mm]					
	Qty	Nail	Qty	Dowel	60	80	100	120	140	160	60	80	100	120	140	160
CBH150/2.5	14	CNA4.0x60	5	STD10	18.0	18.6	20.7	22.4	24.0	24.0	16.4	16.7	18.0	19.3	20.6	21.9
CBH180/2.5	16	CNA4.0x60	6	STD10	25.0	26.5	29.5	32.1	32.6	32.6	22.5	23.4	25.6	27.6	29.7	30.1
CBH220/2.5	22	CNA4.0x60	7	STD10	32.6	34.2	37.9	41.1	42.8	42.8	29.8	30.8	33.3	35.7	38.3	39.5

Note: Minimum carried member width 60mm.

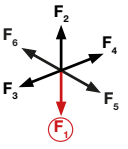

Performance Values – Concrete/Masonry to Timber Connection

References	Fasteners				Characteristic Capacities – Timber C24 [kN]											
					$R_{1,k}$ Slope β=0°						$R_{1,k}$ Slope β>0°					
	Header		Joist		Dowels length [mm]						Dowels length [mm]					
	Qty	Nail	Qty	Dowel	60	80	100	120	140	160	60	80	100	120	140	160
CBH150/2.5	2	M10 Anchor	5	STD10	12.4	13.2	15.6	17.7	19.5	19.5	10.5	10.9	12.5	13.9	15.5	16.9
CBH180/2.5	2	M10 Anchor	6	STD10	19.3	21.1	25.2	28.8	29.7	29.7	16.2	17.3	20.0	22.6	25.4	25.7
CBH220/2.5	2	M10 Anchor	7	STD10	23.8	25.9	30.6	34.9	37.1	37.1	20.1	21.3	24.4	27.5	30.8	32.2

[1] The engineer or designer is to specify the anchor type, ensuring it has sufficient capacity to achieve the stated loads

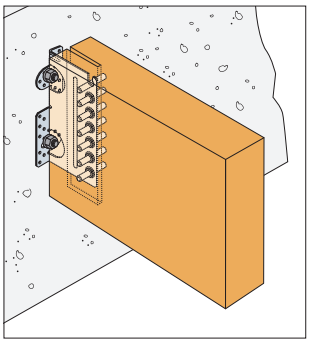

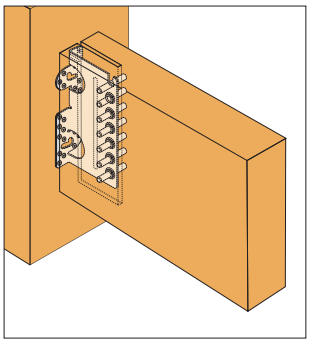

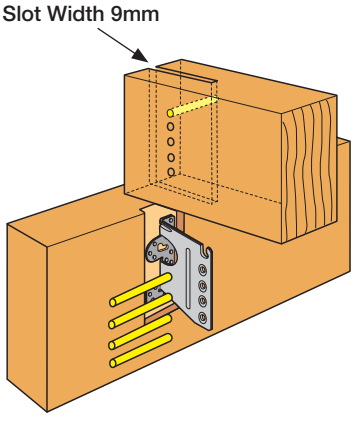

C-C-UK-2023 ©2023 SIMPSON STRONG-TIE COMPANY INC.

BTALU Concealed Beam Hanger

The BTALU concealed hanger is one solution to connecting timber members together without seeing the connector.

It is designed to be fixed to the header timber and then fully inserted into a slot in the in-coming beam, and held in place with dowels. Holes are drilled through the timber and fin of the BTALU, allowing accurate alignment. This method provides an aesthetically pleasing connection for feature beams.

Material: Aluminium.

Note: Nails and dowels included. Please specify the length of the dowel when ordering.

Holes for the joist have to be site drilled in accordance to positions shown in diagram below.

CNA RECOMMENDED FIXINGS

Product Dimensions

References	Min Joist Height [mm]	Hanger Dimensions [mm]				Header Holes	Joist Holes	
		A	B	C	t	Ø5	Ø8	Ø12
BTALU90	142	86	103	62	6	16	4	–
BTALU120	172	116	103	62	6	20	–	3
BTALU160	212	156	103	62	6	28	–	4
BTALU200	252	196	103	62	6	36	–	5
BTALU240	292	236	103	62	6	44	–	6

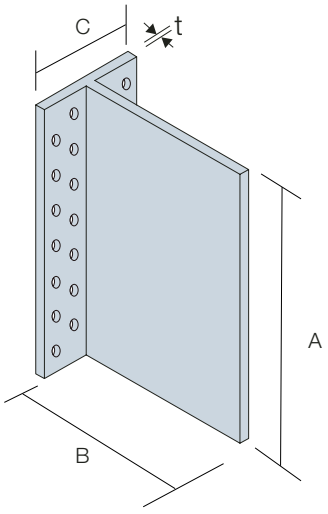

Performance Values

References	Fasteners				Characteristic Capacities [kN] $R_{1,k} = R_{2,k}$ Dowels length [mm]					
	Header		Joist							
	Qty	Nail	Qty	Dowel	60	80	100	120	140	160
BTALU90	16	CNA4.0x50	4	STD8	10.8	11.8	12.9	13.7	13.7	13.7
BTALU120	20	CNA4.0x50	3	STD12	17.3	18.2	19.4	20.7	22.3	23.9
BTALU160	28	CNA4.0x50	4	STD12	28.0	29.5	31.2	33.3	35.7	38.2
BTALU200	36	CNA4.0x50	5	STD12	39.8	41.9	44.3	47.2	50.4	53.9
BTALU240	44	CNA4.0x50	6	STD12	52.2	54.9	57.9	61.7	65.9	70.3

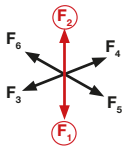

- The joist shall have a minimum width equal to the length of the steel dowel
- For Beams with a slope (β) the capacities shall be multiplied by the factors below

Slope β	0°	15°	30°	45°
factor	1.0	0.95	0.90	0.85

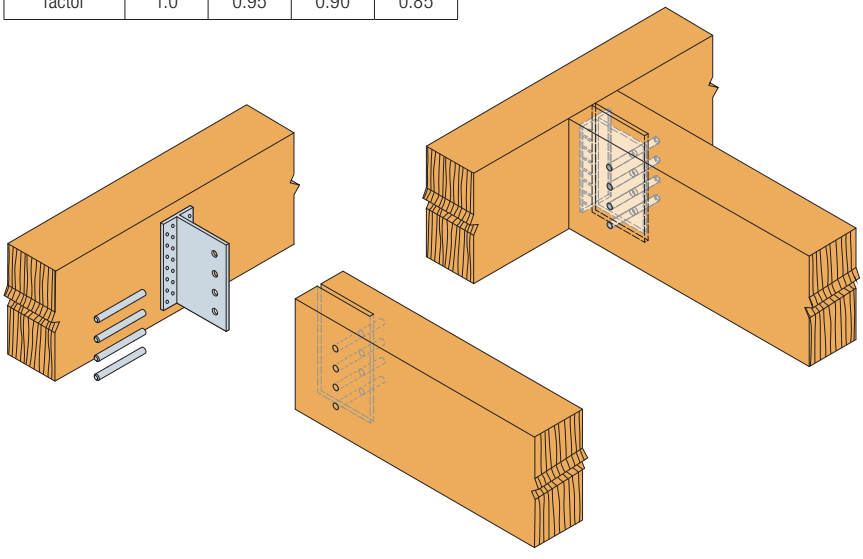

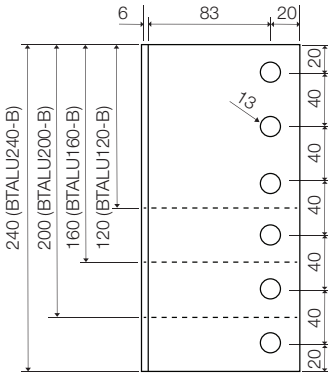

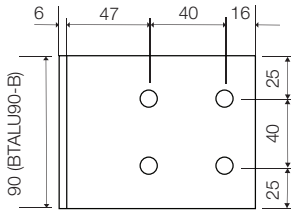

C-C-UK-2023 ©2023 SIMPSON STRONG-TIE COMPANY INC.

BTC Concealed Beam Hanger

The BTC is designed for concealed connections between timber joists/beam and the concrete structure. The number of dowels and anchors can be chosen, depending on the applied load. BTC concealed beam hangers are approved to take load in all 3 directions. Therefore beam connections with a roof pitch can also be built in an easy and safe way.

Material: Pre-galvanised mild steel

Product Dimensions

References	Joist size [mm]	Dimensions [mm]					Header holes	Joist holes
	Height	A	B	C	t_1	t_2	Ø14	Ø13
	Min.							
BTC120-B	160	120	128	96	3	6	2	3
BTC160-B	200	160	128	96	3	6	4	4
BTC200-B	240	200	128	96	3	6	4	5
BTC240-B	280	240	128	96	3	6	4	6
BTC280-B	320	280	128	96	3	6	6	7
BTC320-B	360	320	128	96	3	6	6	8
BTC360-B	400	360	128	96	3	6	6	9
BTC400-B	440	400	128	96	3	6	8	10
BTC440-B	480	440	128	96	3	6	8	11
BTC480-B	520	480	128	96	3	6	8	12
BTC520-B	560	520	128	96	3	6	8	13
BTC560-B	600	560	128	96	3	6	8	14
BTC600-B	640	600	128	96	3	6	8	15

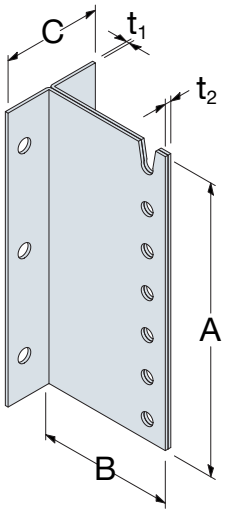

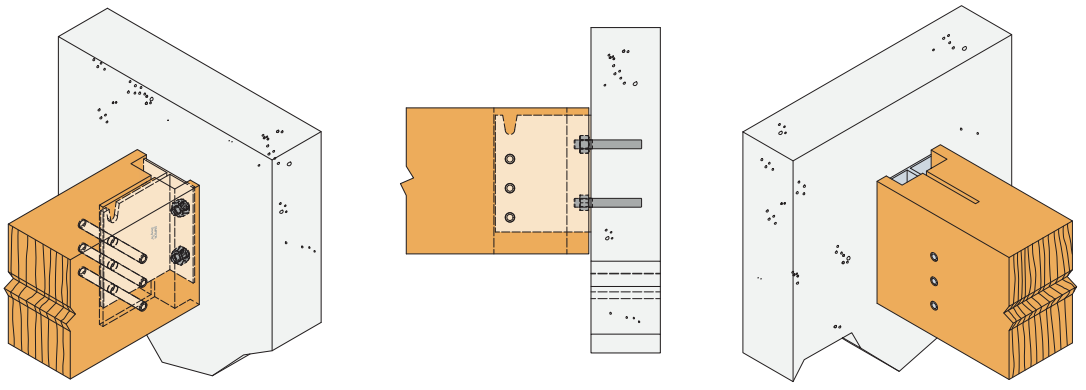

C-C-UK-2023 ©2023 SIMPSON STRONG-TIE COMPANY INC.

BTC Concealed Beam Hanger

SIMPSON Strong-Tie®

Performance values – Timber to rigid support – $R_{1,k}$ and $R_{2,k}$

References	Number of Fasteners				Characteristic Capacities – Timber C24 [kN]											
	Header Anchor		Joist Dowel		$R_{1,k}$ [kN]						$R_{2,k}$ [kN]					
					Dowels length [mm]						Dowels length [mm]					
	Qty	Type	Qty	Type	80	100	120	140	160	180	80	100	120	140	160	180
BTC120-B	2	Ø12	3	STD12	11.5	12.7	14.2	15.8	17.2	17.2	7.7	8.5	9.5	10.5	11.5	11.5
BTC160-B	4	Ø12	4	STD12	18.5	20.4	22.8	25.3	27.8	27.8	13.9	15.3	17.1	19.0	20.9	20.9
BTC200-B	4	Ø12	5	STD12	26.7	29.4	32.7	36.4	40.3	40.3	21.4	23.5	26.2	29.1	32.2	32.2
BTC240-B	4	Ø12	6	STD12	35.8	39.4	43.8	48.6	53.8	54.3	29.8	32.8	36.5	40.5	44.8	45.3
BTC280-B	6	Ø12	7	STD12	45.6	50.1	55.6	61.7	68.3	69.4	39.1	42.9	47.7	52.9	58.5	59.5
BTC320-B	6	Ø12	8	STD12	56.0	62.4	68.1	75.5	83.4	85.5	49.0	53.7	59.6	66.1	73.0	74.8
BTC360-B	6	Ø12	9	STD12	66.8	73.1	80.9	89.6	99.0	102.2	59.4	65.0	71.9	79.6	88.0	90.8
BTC400-B	8	Ø12	10	STD12	77.9	85.1	94.0	104.1	114.8	119.5	70.1	76.6	84.6	93.7	103.3	107.6
BTC440-B	8	Ø12	11	STD12	89.0	97.2	107.3	118.7	130.9	133.3	81.0	88.4	97.5	107.9	119.0	121.2
BTC480-B	8	Ø12	12	STD12	100.5	109.5	120.7	133.4	147.0	147.0	92.1	100.4	110.6	122.3	134.8	134.8
BTC520-B	8	Ø12	12	STD12	100.5	109.5	120.7	133.4	147.0	147.0	100.5	109.5	120.7	133.4	147.0	147.0
BTC560-B	8	Ø12	12	STD12	100.5	109.5	120.7	133.4	147.0	147.0	100.5	109.5	120.7	133.4	147.0	147.0
BTC600-B	8	Ø12	12	STD12	100.5	109.5	120.7	133.4	147.0	147.0	100.5	109.5	120.7	133.4	147.0	147.0

Performance values - Timber to rigid support – $R_{3,k}$ and $R_{4,k}$

References	Number of Fasteners				Characteristic Capacities – Timber C24 [kN]						Characteristic Capacities – C24 [kN]
	Header Anchor		Joist Dowel		$R_{3,k} = R_{4,k}$ [kN]						$R_{5,k}$ [kN]
					Dowels length [mm]						
	Qty	Type	Qty	Type	80	100	120	140	160	180	
BTC120-B	2	Ø12	3	STD12	2.9	3.5	4.0	4.5	5.2	5.3	6.1
BTC160-B	4	Ø12	4	STD12	3.9	4.4	5.0	5.9	6.5	7.0	12.2
BTC200-B	4	Ø12	5	STD12	4.9	5.5	6.3	7.2	7.8	8.8	12.2
BTC240-B	4	Ø12	6	STD12	5.7	6.6	7.5	8.4	9.1	10.4	12.2
BTC280-B	6	Ø12	7	STD12	6.5	7.6	8.7	9.6	10.4	11.9	18.3
BTC320-B	6	Ø12	8	STD12	7.3	8.9	9.7	10.8	11.8	13.4	18.3
BTC360-B	6	Ø12	9	STD12	8.1	9.5	10.8	12.0	13.2	14.9	18.3
BTC400-B	8	Ø12	10	STD12	8.9	10.5	11.9	13.2	14.7	16.4	24.4
BTC440-B	8	Ø12	11	STD12	9.7	11.4	13.0	14.4	16.1	17.8	24.4
BTC480-B	8	Ø12	12	STD12	10.6	12.4	14.1	15.6	17.6	19.3	24.4
BTC520-B	8	Ø12	12	STD12	11.4	13.3	15.1	16.8	19.1	20.8	24.4
BTC560-B	8	Ø12	12	STD12	12.3	14.3	16.2	18.0	20.5	22.3	24.4
BTC600-B	8	Ø12	12	STD12	13.2	15.2	17.3	19.2	22.0	23.8	24.4

The anchors resistance and their number have to be checked according to the ETA and the type of header. The number of anchors given in the table is the maximum. If their resistance is decisive, it is the resistance to consider for the connection.

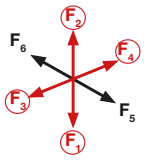

C-C-UK-2023 ©2023 SIMPSON STRONG-TIE COMPANY INC.

ATFN Concealed Beam Hanger

The ATFN is a two piece steel plate connector. The first part of the connector is fixed into a pocket on the header and the second part is fitted onto the end of the incoming beam. Both parts are fixed with CSA screws. No slots or dowel holes are necessary, speeding up installation.

Material: Pre-galvanised mild steel.

Note: Fixings are included.

Product Dimensions

References	Joist Size [mm]		Hanger Dimensions [mm]				Header Holes	Joist Holes
	Width	Height						
	Min	Min	A	B	t_1	t_2	Ø5	Ø5
ATFN55/110	80	140	110	55	5	5	8	11
ATFN55/150	80	180	150	55	5	5	11	15
ATFN55/190	80	220	190	55	5	5	14	21
ATFN75/150	100	180	150	75	5	5	17	22
ATFN75/190	100	220	190	75	5	5	21	28

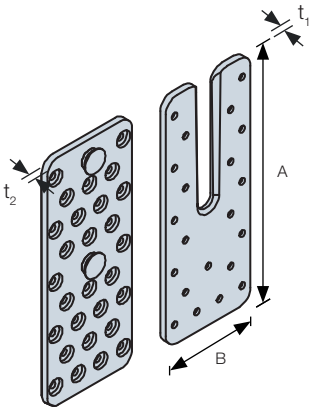

Performance Values

References	Fasteners				Characteristic Capacities – Timber [kN]
	Header		Joist		
	Qty	Type	Qty	Type	$R_{1,k}$
ATFN55/110	8	CSA5.0x50	11	CSA5.0x50	11.4
ATFN55/150	11	CSA5.0x50	15	CSA5.0x50	15.5
ATFN55/190	14	CSA5.0x50	21	CSA5.0x50	21.7
ATFN75/150	17	CSA5.0x50	22	CSA5.0x50	22.8
ATFN75/190	21	CSA5.0x50	28	CSA5.0x50	29.0

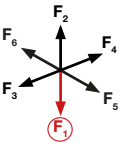

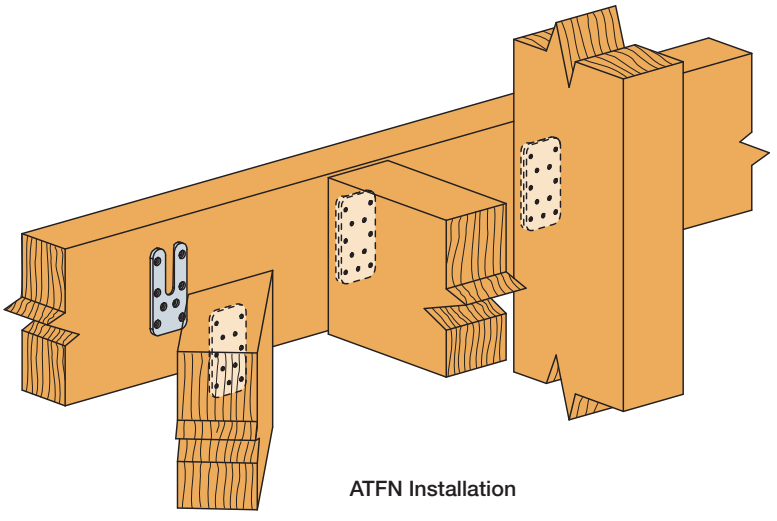

ATFN Installation

C-C-UK-2023 ©2023 SIMPSON STRONG-TIE COMPANY INC.

ETB Concealed Beam Hanger

The ETB concealed connector comes in two parts. The first is pocketed in the header timber and fixed with nails, while the second part is fitted to the end of the beam with screws.

Material: Joist Plate: 10mm aluminium. Header plate: 6mm aluminium.

Note: Fixings are included.

SCRB RECOMMENDED FIXINGS

CNA RECOMMENDED FIXINGS

Product Dimensions

References	Joist Size [mm]			Hanger Dimensions [mm]						Header Holes	Joist Holes
	Width	Height									
	Min	Min	Max.	A	B	C	D	t_1	t_2	Ø5	Ø5.4
ETB90-B	70	115	150	90	60	58	69	6	10	6	4
ETB120-B	70	150	200	121	60	85	95	6	10	9	6
ETB160-B	70	185	250	166	60	95	130	6	10	11	8
ETB190-B	90	220	300	195	75	138	165	6	10	19	11
ETB230-B	90	255	350	230	75	138	200	6	10	19	14

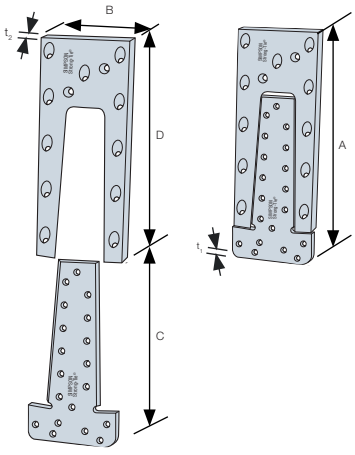

Performance Values

References	Fasteners				Characteristic Capacities – Timber [kN]
	Header		Joist		$R_{1,k}$
	Qty	Type	Qty	Type	
ETB90-B	6	CNA4.0x60	4	Screws 5.0x80*	13.0
ETB120-B	9	CNA4.0x60	6	Screws 5.0x80*	18.7
ETB160-B	11	CNA4.0x60	8	Screws 5.0x80*	24.2
ETB190-B	19	CNA4.0x60	11	Screws 5.0x80*	32.0
ETB230-B	19	CNA4.0x60	14	Screws 5.0x80*	40.0

*) Screws 5x80 refers to SCRB5.0x80 Screws, or Spax 5.0x80 screws

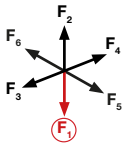

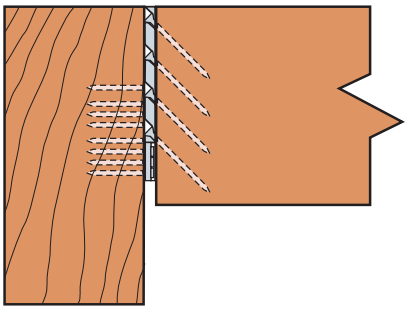

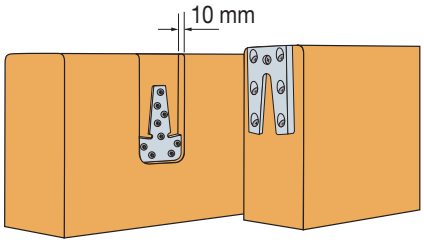

C-C-UK-2023 ©2023 SIMPSON STRONG-TIE COMPANY INC.

EWH Engineered Wood Hanger

Universal, flexible and simple to install, the EWH hanger is an engineered hanger that has been designed to fulfil a wide variety of installation options.

Suitable for use with combinations of the following:

Headers: I-Joists, Metal Web Joists, Solid Timber and SIP's.
Joists: I-Joists, Metal Web Joists, and Solid Timber.

Note: Solid timber refers to LVL, Glulam or Solid Sawn Timber.

Features:

- Choice of installation options - Top Fix, Face Fix.
- Hanger supplied with top flange straight so that it can be bent on site to accommodate a range of joist heights.
- Perforations allow the top flange to be snapped off for face fix installation option.
- Optional triangular holes for increased download and uplift performances.
- Seat tab for ease of installation.
- Seat tab can be bent upwards for installations where the header is deeper than the joist.

Material: Pre-galvanised mild steel.

Installation:

- Use all specified fasteners.
- For STANDARD installation all round holes to be filled.
- For ENHANCED installation, all round and triangular holes to be filled (excluding triangular hole in the hanger's seat tab).
- Refer to Installation Details section for more detailed information.

Joist to Hanger Height and Width Suitability

Joist Heights (mm)	Hanger Height (B) (mm)	Joist Widths [mm]												
		38 39	45	47	53	58	60	63	69 70	72	75 2x38 2x39	89 90 2x45	2x47	96 97
		Hanger Widths (A) [mm]												
		40	47	50	56	61	63	66	72	75	79	91	96	99
195, 200, 202	195	•	•	•	•	•	•		•	•	•	•	•	•
219, 220, 225	219	•	•	•	•	•	•	•	•	•	•	•	•	•
235, 240	235	•	•	•	•	•	•	•	•	•	•	•	•	•
245, 250	245	•	•	•		•		•		•	•	•	•	•
253, 254	253		•	•						•		•		•
295	295								•					•
300, 304	300	•	•	•	•	•	•	•	•	•	•	•	•	•
350, 356	350		•	•			•		•	•		•	•	•
360	360		•	•		•	•	•	•		•	•	•	•
373	370			•						•				•
400	400		•	•		•	•	•	•	•		•	•	•
417, 421	417			•						•				•

C-C-UK-2023 ©2023 SIMPSON STRONG-TIE COMPANY INC.

EWH Engineered Wood Hanger

SIMPSON Strong-Tie®

Joist to Hanger Height and Width Suitability

Joist Heights (mm)	Hanger Height (B) (mm)	Joist Widths [mm]											
		(2x53)	(2x58)	(2x60)	(122)	(2x63)	(140) (2x69) (2x70)	(2x72)	(147) (2x75)	(2x89) (2x90)	(2x96) (2x97)	(2x122)	(2x147)
		Hanger Widths (A) [mm]											
		109	119	122	125	128	142	146	150	182	196	246	296
195, 200, 202	195	•	•	•	•		•	•	•	•	•	•	•
219, 220, 225	219	•	•	•	•	•	•	•	•	•	•	•	•
235, 240	235	•	•	•		•	•	•		•	•		
245, 250	245		•			•		•		•	•		
253, 254	253				•			•	•		•	•	•
295	295												
300, 304	300	•	•	•	•	•	•	•	•	•	•	•	•
350, 356	350			•			•						
360	360		•	•						•			
373	370												
400	400		•	•						•			
417, 421	417												

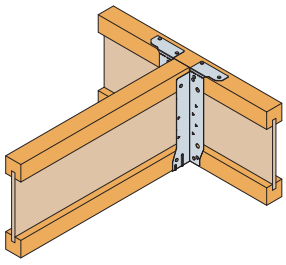
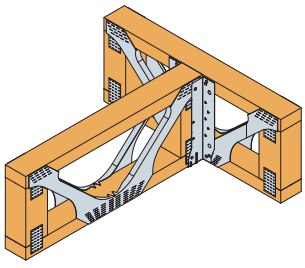
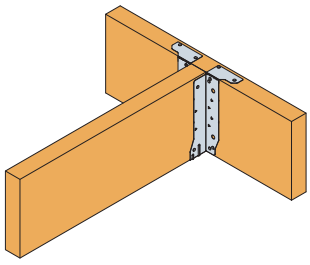
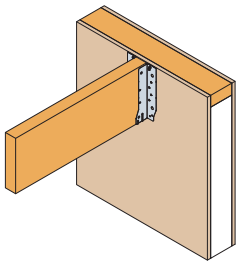

Product Dimensions

Hanger Range	Hanger Dimensions [mm]						Holes					
							Flange B			Flange C		Flange E
References	A	B	C	D	E	t	Ø5.0	Ø10.0	Tri	Ø5.0	Tri	Ø5.0
EWH195/40	40	195	49	80	40	0.9	8	4	6	4	4	4
EWH219/40	40	219	49	80	40	0.9	8	4	8	4	4	4
EWH235/40	40	235	49	80	40	0.9	8	4	10	4	4	4
EWH245/40	40	245	49	80	40	0.9	8	4	10	4	4	4
EWH300/40	40	300	49	80	40	0.9	8	4	10	4	4	4
EWH195/47	47	195	49	80	40	0.9	8	4	6	4	4	4
EWH219/47	47	219	49	80	40	0.9	8	4	8	4	4	4
EWH235/47	47	235	49	80	40	0.9	8	4	10	4	4	4
EWH245/47	47	245	49	80	40	0.9	8	4	10	4	4	4
EWH253/47	47	253	49	80	40	0.9	8	4	10	4	4	4
EWH300/47	47	300	49	80	40	0.9	8	4	10	4	4	4
EWH350/47	47	350	49	80	40	1.2	8	4	10	4	4	4
EWH360/47	47	360	49	80	40	1.2	8	4	10	4	4	4
EWH400/47	47	400	49	80	40	1.2	8	4	10	4	4	4
EWH195/50	50	195	49	80	40	0.9	8	4	6	4	4	4
EWH219/50	50	219	49	80	40	0.9	8	4	8	4	4	4
EWH235/50	50	235	49	80	40	0.9	8	4	10	4	4	4
EWH245/50	50	245	49	80	40	0.9	8	4	10	4	4	4
EWH253/50	50	253	49	80	40	0.9	8	4	10	4	4	4
EWH300/50	50	300	49	80	40	0.9	8	4	10	4	4	4
EWH350/50	50	350	49	80	40	1.2	8	4	10	4	4	4
EWH360/50	50	360	49	80	40	1.2	8	4	10	4	4	4

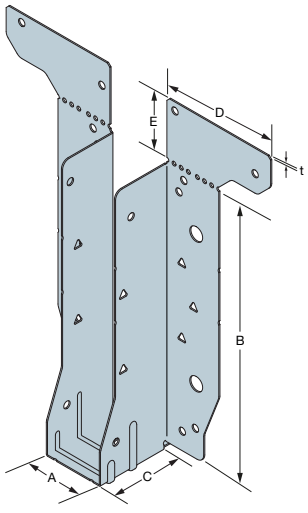

C-C-UK-2023 ©2023 SIMPSON STRONG-TIE COMPANY INC.

EWH Engineered Wood Hanger

SIMPSON Strong-Tie

Product Dimensions

Hanger Range	Hanger Dimensions [mm]						Holes					
							Flange B			Flange C		Flange E
References	A	B	C	D	E	t	Ø5.0	Ø10.0	Tri	Ø5.0	Tri	Ø5.0
EWH370/50	50	370	49	80	40	1.2	8	4	10	4	4	4
EWH400/50	50	400	49	80	40	1.2	8	4	10	4	4	4
EWH417/50	50	417	49	80	40	1.2	8	4	10	4	4	4
EWH195/56	56	195	49	80	40	0.9	8	4	6	4	4	4
EWH219/56	56	219	49	80	40	0.9	8	4	8	4	4	4
EWH235/56	56	235	49	80	40	0.9	8	4	10	4	4	4
EWH300/56	56	300	49	80	40	0.9	8	4	10	4	4	4
EWH195/61	61	195	49	80	40	0.9	8	4	6	4	4	4
EWH219/61	61	219	49	80	40	0.9	8	4	8	4	4	4
EWH235/61	61	235	49	80	40	0.9	8	4	10	4	4	4
EWH245/61	61	245	49	80	40	0.9	8	4	10	4	4	4
EWH300/61	61	300	49	80	40	0.9	8	4	10	4	4	4
EWH360/61	61	360	49	80	40	1.2	8	4	10	4	4	4
EWH400/61	61	400	49	80	40	1.2	8	4	10	4	4	4
EWH195/63	63	195	49	80	40	0.9	8	4	6	4	4	4
EWH219/63	63	219	49	80	40	0.9	8	4	8	4	4	4
EWH235/63	63	235	49	80	40	0.9	8	4	10	4	4	4
EWH300/63	63	300	49	80	40	0.9	8	4	10	4	4	4
EWH350/63	63	350	49	80	40	1.2	8	4	10	4	4	4
EWH360/63	63	360	49	80	40	1.2	8	4	10	4	4	4
EWH400/63	63	400	49	80	40	1.2	8	4	10	4	4	4
EWH219/66	66	219	49	80	40	0.9	8	4	8	4	4	4
EWH235/66	66	235	49	80	40	0.9	8	4	10	4	4	4
EWH245/66	66	245	49	80	40	0.9	8	4	10	4	4	4
EWH300/66	66	300	49	80	40	0.9	8	4	10	4	4	4
EWH360/66	66	360	49	80	40	1.2	8	4	10	4	4	4
EWH400/66	66	400	49	80	40	1.2	8	4	10	4	4	4
EWH195/72	72	195	49	80	40	0.9	8	4	6	4	4	4
EWH219/72	72	219	49	80	40	0.9	8	4	8	4	4	4
EWH235/72	72	235	49	80	40	0.9	8	4	10	4	4	4
EWH295/72	72	295	49	80	40	0.9	8	4	10	4	4	4
EWH300/72	72	300	49	80	40	0.9	8	4	10	4	4	4
EWH350/72	72	350	49	80	40	1.2	8	4	10	4	4	4
EWH360/72	72	360	49	80	40	1.2	8	4	10	4	4	4
EWH400/72	72	400	49	80	40	1.2	8	4	10	4	4	4
EWH195/75	75	195	49	80	40	0.9	8	4	6	4	4	4
EWH219/75	75	219	49	80	40	0.9	8	4	8	4	4	4
EWH235/75	75	235	49	80	40	0.9	8	4	10	4	4	4
EWH245/75	75	245	49	80	40	0.9	8	4	10	4	4	4
EWH253/75	75	253	49	80	40	0.9	8	4	10	4	4	4
EWH300/75	75	300	49	80	40	0.9	8	4	10	4	4	4
EWH350/75	75	350	49	80	40	1.2	8	4	10	4	4	4
EWH370/75	75	370	49	80	40	1.2	8	4	10	4	4	4
EWH400/75	75	400	49	80	40	1.2	8	4	10	4	4	4
EWH417/75	75	417	49	80	40	1.2	8	4	10	4	4	4
EWH195/79	79	195	49	80	40	0.9	8	4	6	4	4	4
EWH219/79	79	219	49	80	40	0.9	8	4	8	4	4	4
EWH235/79	79	235	49	80	40	0.9	8	4	10	4	4	4
EWH245/79	79	245	49	80	40	0.9	8	4	10	4	4	4
EWH300/79	79	300	49	80	40	0.9	8	4	10	4	4	4

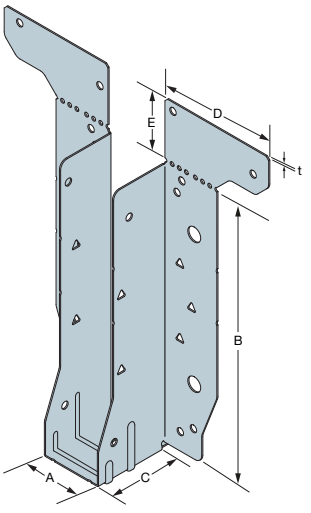

C-C-UK-2023 ©2023 SIMPSON STRONG-TIE COMPANY INC.

EWH Engineered Wood Hanger

Product Dimensions

Hanger Range	Hanger Dimensions [mm]						Holes					
							Flange B			Flange C		Flange E
References	A	B	C	D	E	t	Ø5.0	Ø10.0	Tri	Ø5.0	Tri	Ø5.0
EWH360/79	79	360	49	80	40	1.2	8	4	10	4	4	4
EWH195/91	91	195	49	80	40	0.9	8	4	6	4	4	4
EWH219/91	91	219	49	80	40	0.9	8	4	8	4	4	4
EWH235/91	91	235	49	80	40	0.9	8	4	10	4	4	4
EWH245/91	91	245	49	80	40	0.9	8	4	10	4	4	4
EWH253/91	91	253	49	80	40	0.9	8	4	10	4	4	4
EWH300/91	91	300	49	80	40	0.9	8	4	10	4	4	4
EWH350/91	91	350	49	80	40	1.2	8	4	10	4	4	4
EWH360/91	91	360	49	80	40	1.2	8	4	10	4	4	4
EWH400/91	91	400	49	80	40	1.2	8	4	10	4	4	4
EWH195/96	96	195	49	80	40	0.9	8	4	6	4	4	4
EWH219/96	96	219	49	80	40	0.9	8	4	8	4	4	4
EWH235/96	96	235	49	80	40	0.9	8	4	10	4	4	4
EWH245/96	96	245	49	80	40	0.9	8	4	10	4	4	4
EWH300/96	96	300	49	80	40	0.9	8	4	10	4	4	4
EWH350/96	96	350	49	80	40	1.2	8	4	10	4	4	4
EWH360/96	96	360	49	80	40	1.2	8	4	10	4	4	4
EWH400/96	96	400	49	80	40	1.2	8	4	10	4	4	4
EWH195/99	99	195	49	80	40	0.9	8	4	6	4	4	4
EWH219/99	99	219	49	80	40	0.9	8	4	8	4	4	4
EWH235/99	99	235	49	80	40	0.9	8	4	10	4	4	4
EWH245/99	99	245	49	80	40	0.9	8	4	10	4	4	4
EWH253/99	99	253	49	80	40	0.9	8	4	10	4	4	4
EWH295/99	99	295	49	80	40	0.9	8	4	10	4	4	4
EWH300/99	99	300	49	80	40	0.9	8	4	10	4	4	4
EWH350/99	99	350	49	80	40	1.2	8	4	10	4	4	4
EWH360/99	99	360	49	80	40	1.2	8	4	10	4	4	4
EWH370/99	99	370	49	80	40	1.2	8	4	10	4	4	4
EWH400/99	99	400	49	80	40	1.2	8	4	10	4	4	4
EWH417/99	99	417	49	80	40	1.2	8	4	10	4	4	4
EWH195/109	109	195	49	80	40	1.2	8	4	6	4	4	4
EWH219/109	109	219	49	80	40	1.2	8	4	8	4	4	4
EWH235/109	109	235	49	80	40	1.2	8	4	10	4	4	4
EWH300/109	109	300	49	80	40	1.2	8	4	10	4	4	4
EWH195/119	119	195	49	80	40	1.2	8	4	6	4	4	4
EWH219/119	119	219	49	80	40	1.2	8	4	8	4	4	4
EWH235/119	119	235	49	80	40	1.2	8	4	10	4	4	4
EWH245/119	119	245	49	80	40	1.2	8	4	10	4	4	4
EWH300/119	119	300	49	80	40	1.2	8	4	10	4	4	4
EWH360/119	119	360	49	80	40	1.2	8	4	10	4	4	4
EWH400/119	119	400	49	80	40	1.2	8	4	10	4	4	4
EWH195/122	122	195	49	80	40	1.2	8	4	6	4	4	4
EWH219/122	122	219	49	80	40	1.2	8	4	8	4	4	4
EWH235/122	122	235	49	80	40	1.2	8	4	10	4	4	4
EWH300/122	122	300	49	80	40	1.2	8	4	10	4	4	4
EWH350/122	122	350	49	80	40	1.2	8	4	10	4	4	4
EWH360/122	122	360	49	80	40	1.2	8	4	10	4	4	4
EWH400/122	122	400	49	80	40	1.2	8	4	10	4	4	4
EWH195/125	125	195	49	80	40	1.2	8	4	6	4	4	4
EWH219/125	125	219	49	80	40	1.2	8	4	8	4	4	4

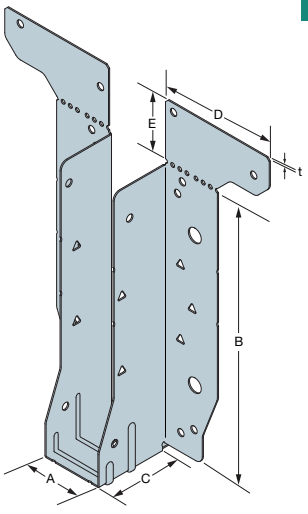

C-C-UK-2023 ©2023 SIMPSON STRONG-TIE COMPANY INC.

EWH Engineered Wood Hanger

SIMPSON Strong-Tie

Product Dimensions

Hanger Range	Hanger Dimensions [mm]						Holes					
							Flange B			Flange C		Flange E
References	A	B	C	D	E	t	Ø5.0	Ø10.0	Tri	Ø5.0	Tri	Ø5.0
EWH253/125	125	253	49	80	40	1.2	8	4	10	4	4	4
EWH300/125	125	300	49	80	40	1.2	8	4	10	4	4	4
EWH219/128	128	219	49	80	40	1.2	8	4	8	4	4	4
EWH235/128	128	235	49	80	40	1.2	8	4	10	4	4	4
EWH245/128	128	245	49	80	40	1.2	8	4	10	4	4	4
EWH300/128	128	300	49	80	40	1.2	8	4	10	4	4	4
EWH195/142	142	195	49	80	40	1.2	8	4	6	4	4	4
EWH219/142	142	219	49	80	40	1.2	8	4	8	4	4	4
EWH235/142	142	235	49	80	40	1.2	8	4	10	4	4	4
EWH300/142	142	300	49	80	40	1.2	8	4	10	4	4	4
EWH350/142	142	350	49	80	40	1.2	8	4	10	4	4	4
EWH195/146	146	195	49	80	40	1.2	8	4	6	4	4	4
EWH219/146	146	219	49	80	40	1.2	8	4	8	4	4	4
EWH235/146	146	235	49	80	40	1.2	8	4	10	4	4	4
EWH245/146	146	245	49	80	40	1.2	8	4	10	4	4	4
EWH253/146	146	253	49	80	40	1.2	8	4	10	4	4	4
EWH300/146	146	300	49	80	40	1.2	8	4	10	4	4	4
EWH195/150	150	195	49	80	40	1.2	8	4	6	4	4	4
EWH219/150	150	219	49	80	40	1.2	8	4	8	4	4	4
EWH253/150	150	253	49	80	40	1.2	8	4	10	4	4	4
EWH300/150	150	300	49	80	40	1.2	8	4	10	4	4	4
EWH195/182	182	195	49	80	40	1.2	8	4	6	4	4	4
EWH219/182	182	219	49	80	40	1.2	8	4	8	4	4	4
EWH235/182	182	235	49	80	40	1.2	8	4	10	4	4	4
EWH245/182	182	245	49	80	40	1.2	8	4	10	4	4	4
EWH300/182	182	300	49	80	40	1.2	8	4	10	4	4	4
EWH360/182	182	360	49	80	40	1.2	8	4	10	4	4	4
EWH400/182	182	400	49	80	40	1.2	8	4	10	4	4	4
EWH195/196	196	195	49	80	40	1.2	8	4	6	4	4	4
EWH219/196	196	219	49	80	40	1.2	8	4	8	4	4	4
EWH235/196	196	235	49	80	40	1.2	8	4	10	4	4	4
EWH245/196	196	245	49	80	40	1.2	8	4	10	4	4	4
EWH253/196	196	253	49	80	40	1.2	8	4	10	4	4	4
EWH300/196	196	300	49	80	40	1.2	8	4	10	4	4	4
EWH195/246	246	195	49	80	40	1.2	8	4	6	4	4	4
EWH219/246	246	219	49	80	40	1.2	8	4	8	4	4	4
EWH253/246	246	253	49	80	40	1.2	8	4	10	4	4	4
EWH300/246	246	300	49	80	40	1.2	8	4	10	4	4	4
EWH195/296	296	195	49	80	40	1.2	8	4	6	4	4	4
EWH219/296	296	219	49	80	40	1.2	8	4	8	4	4	4
EWH253/296	296	253	49	80	40	1.2	8	4	10	4	4	4
EWH300/296	296	300	49	80	40	1.2	8	4	10	4	4	4

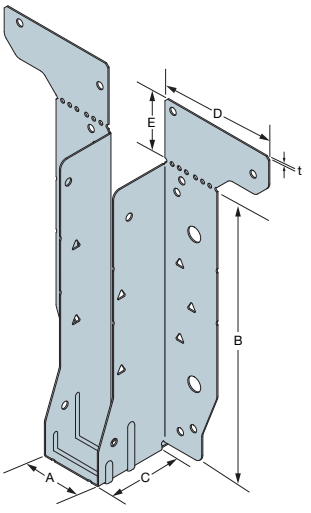

C-C-UK-2023 ©2023 SIMPSON STRONG-TIE COMPANY INC.

EWH Engineered Wood Hanger

I-Joist Headers

Performance Values: Standard I-Joist Header Installation Options

References	Installation	Fasteners					Characteristic Capacities [kN]					
							$R_{1,k}$			$R_{2,K}$		
		Face (Flange B)		Top (Flange E)	Joist (Flange C)		Header Type			Joist Type		
		Ø5 Holes	Tri Holes	Ø5 Holes	Ø5 Holes	Tri Holes	LVL I-Joist 36mm	LVL I-Joist 39mm	SS I-Joist 45mm	LVL I-Joist 36mm	LVL I-Joist 39mm	SS I-Joist 45mm
							N3.75x30	N3.75x30	N3.75x30	N3.75x30	N3.75x30	N3.75x30
EWH	Top Fix	8	-	4	4	-	11.0	13.0	12.1	2.3	2.5	3.5
	Face Fix	8	-	-	4	-	6.0	9.2	8.0	2.3	2.5	3.5

References	Installation	Fasteners					Safe Working Loads [kN]					
							$R_{1,SWL,LT}$			$R_{2,SWL,LT}$		
		Face (Flange B)		Top (Flange E)	Joist (Flange C)		Header Type			Joist Type		
		Ø5 Holes	Tri Holes	Ø5 Holes	Ø5 Holes	Tri Holes	LVL I-Joist 36mm	LVL I-Joist 39mm	SS I-Joist 45mm	LVL I-Joist 36mm	LVL I-Joist 39mm	SS I-Joist 45mm
							N3.75x30	N3.75x30	N3.75x30	N3.75x30	N3.75x30	N3.75x30
EWH	Top Fix	8	-	4	4	-	4.6	5.4	5.0	1.2	1.3	1.8
	Face Fix	8	-	-	4	-	2.5	3.8	3.3	1.2	1.3	1.8

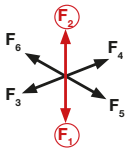

Note: 36mm, 39mm and 45mm refers to the flange depth.

Performance Values: Enhanced I-Joist Header Installation Options

References	Installation	Fasteners					Characteristic Capacities [kN]			Safe Working Loads [kN]		
							$R_{1,k}$		$R_{2,K}$	$R_{1,SWL,LT}$		$R_{2,SWL,LT}$
		Face (Flange B)		Top (Flange E)	Joist (Flange C)		Header Type		Joist Type	Header Type		Joist Type
		Ø5 Holes	Tri Holes	Ø5 Holes	Ø5 Holes	Tri Holes	LVL I-Joist Enhanced	SS I-Joist Enhanced	I-Joist + Web Stiffeners	LVL I-Joist Enhanced	SS I-Joist Enhanced	I-Joist + Web Stiffeners
							N3.75x30	N3.75x30	N3.75x30	N3.75x30	N3.75x30	N3.75x30
EWH	Top Fix	8	6	4	4	-	18.3	18.2	-	7.6	7.6	-
		8	8	4	4	-	19.9	19.6	-	8.3	8.2	-
		8	10	4	4	-	20.3	20.6	-	8.5	8.6	-
		8	6 - 10	4	4	4	-	-	8.0	-	-	4.0
	Face Fix	8	6	-	4	-	15.5	16.3	-	6.5	6.8	-
		8	8	-	4	-	16.9	16.6	-	7.0	6.9	-
		8	10	-	4	-	17.6	17.7	-	7.3	7.4	-
		8	6 - 10	-	4	4	-	-	8.0	-	-	4.0

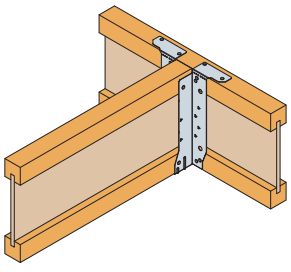

Top Fix: Standard Installation

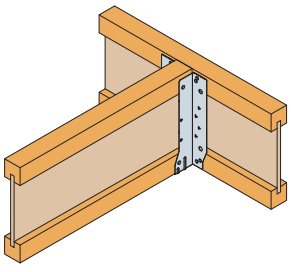

Face Fix: Standard Installation

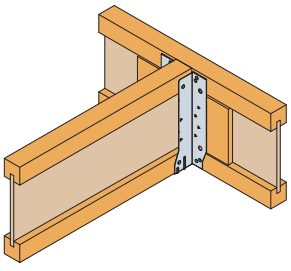

Face Fix: Enhanced Installation

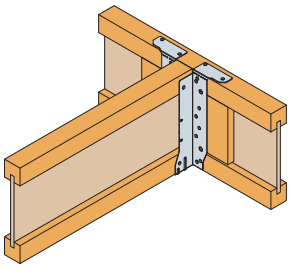

Top Fix: Enhanced Installation

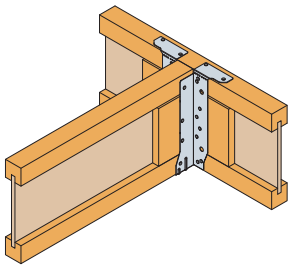

Top Fix: Enhanced Uplift Installation

C-C-UK-2023 ©2023 SIMPSON STRONG-TIE COMPANY INC.

EWH Engineered Wood Hanger

SIMPSON Strong-Tie®

Metal Web Headers

Performance Values: Standard Metal Web Header Installation Options

References	Installation	Fasteners					Characteristic Capacities [kN]			Safe Working Loads [kN]		
							$R_{1,k}$		$R_{2,k}$	$R_{1,SWL,LT}$		$R_{2,SWL,ST}$
		Face (Flange B)		Top (Flange E)	Joist (Flange C)		Header Type		Joist Type	Header Type		Joist Type
							Metal web		Metal web	Metal web		Metal web
		Ø5 Holes	Tri Holes	Ø5 Holes	Ø5 Holes	Tri Holes	N3.75x30	CSA5.0x50	N3.75x30	N3.75x30	CSA5.0x50	N3.75x30
EWH	Top Fix	8	-	4	4	-	13.0	16.4	3.5	5.4	6.8	1.8
	Face Fix	8	-	-	4	-	9.9	13.7	3.5	4.1	5.7	1.8

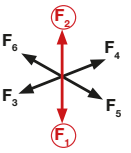

Performance Values: Enhanced Metal Web Header Installation Options

References	Installation	Fasteners					Characteristic Capacities [kN]				Safe Working Loads [kN]			
							$R_{1,k}$		$R_{2,k}$		$R_{1,SWL,LT}$		$R_{2,SWL,ST}$	
		Face (Flange B)		Top (Flange E)	Joist (Flange C)		Header Type		Joist Type		Header Type		Joist Type	
							Metal web		Metal web		Metal web		Metal web	
		Ø5 Holes	Tri Holes	Ø5 Holes	Ø5 Holes	Tri Holes	N3.75x30	CSA5.0x50	N3.75x30	N3.75x30	N3.75x30	CSA5.0x50	N3.75x30	N3.75x30
EWH	Top Fix	8	6	4	4	-	17.1	17.4	3.5	-	7.1	7.3	1.8	-
		8	8	4	4	-	18.0	18.3	3.5	-	7.5	7.6	1.8	-
		8	10	4	4	-	18.6	18.9	3.5	-	7.8	7.9	1.8	-
		8	6 - 10	4	4	4	-	-	-	8.0	-	-	-	4.0
	Face Fix	8	6	-	4	-	15.5	16.6	3.5	-	6.5	6.9	1.8	-
		8	8	-	4	-	17.3	18.4	3.5	-	7.2	7.7	1.8	-
		8	10	-	4	-	19.1	20.2	3.5	-	8.0	8.4	1.8	-
		8	6 - 10	-	4	4	-	-	-	8.0	-	-	-	4.0

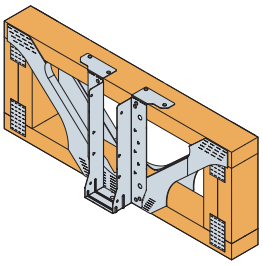

Top Fix: Standard Installation

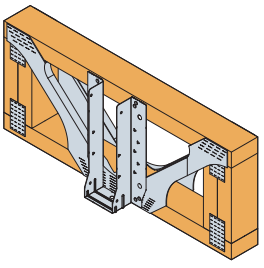

Face Fix: Standard Installation

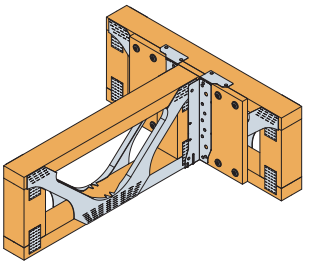

Top Fix: Enhanced Installation

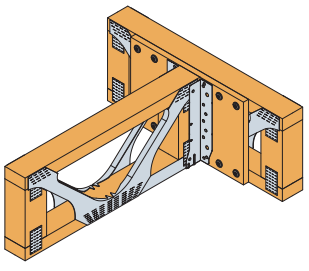

Face Fix: Enhanced Installation

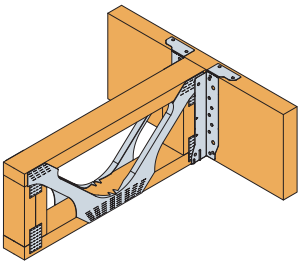

Top Fix: Metal Web Joist to Solid Header

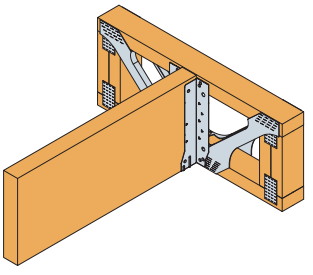

Face Fix: Solid Timber to Metal Web Joist

C-C-UK-2023 ©2023 SIMPSON STRONG-TIE COMPANY INC.

EWH Engineered Wood Hanger

Solid Headers

Performance Values: Solid Header Installation Options

References	Installation	Fasteners					Characteristic Capacities [kN]				Safe Working Loads [kN]			
							$R_{1,k}$			$R_{2,k}$	$R_{1,SWL,LT}$			$R_{2,SWL,ST}$
		Face (Flange B)		Top (Flange E)	Joist (Flange C)		Header Type			Joist Type	Header Type			Joist Type
		Ø5 Holes	Tri Holes	Ø5 Holes	Ø5 Holes	Tri Holes	LVL	Glulam	C24 Solid Sawn Timber	LVL Glulam C24 Solid Sawn	LVL	Glulam	C24 Solid Sawn Timber	LVL Glulam C24 Solid Sawn
							N3.75x30	N3.75x30	N3.75x30	N3.75x30	N3.75x30	N3.75x30	N3.75x30	N3.75x30
EWH	Top Fix	8	-	4	4	-	15.5	12.9	12.8	3.5	6.5	5.4	5.3	1.8
		8	6	4	4	-	18.8	18.5	17.6	3.5	7.8	7.7	7.3	1.8
		8	8	4	4	-	19.0	19.0	18.5	3.5	7.9	7.9	7.7	1.8
		8	10	4	4	-	20.4	19.4	19.1	3.5	8.5	8.1	8.0	1.8
		8	6 - 10	4	4	4	-	-	-	8.0	-	-	-	4.0
	Face Fix	8	-	-	4	-	11.1	9.0	6.6	3.5	4.6	3.8	2.8	1.8
		8	6	-	4	-	18.7	16.3	13.4	3.5	7.8	6.8	5.6	1.8
		8	8	-	4	-	20.4	17.9	15.2	3.5	8.5	7.5	6.3	1.8
		8	10	-	4	-	21.3	18.6	17.1	3.5	8.9	7.8	7.1	1.8
		8	6 - 10	-	4	4	-	-	-	8.0	-	-	-	4.0

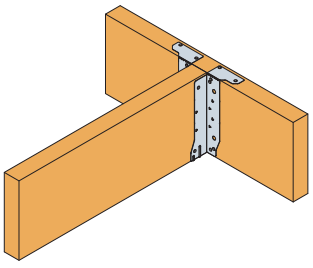

Top Fix: Standard Installation

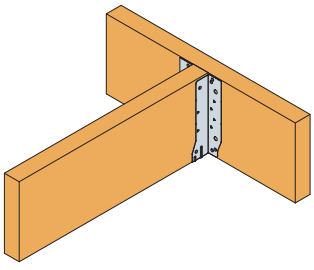

Face Fix: Standard Installation

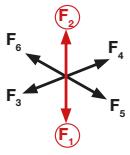

Timber Nailer Headers

EWH Timber Nailer Installation Options

References	Timber Nailer Depth [mm]	Fasteners					Characteristic Capacities [kN]				Safe Working Loads [kN]			
		Face (Flange B)		Top (Flange E)	Joist (Flange C)		$R_{1,k}$			$R_{2,k}$ (1)	$R_{1,SWL,LT}$			$R_{2,SWL,ST}$ (1)
		Ø5 Holes	Tri Holes	Ø5 Holes	Ø5 Holes	Tri Holes	N3.75x30	N3.75x75	CSA5.0x40	N3.75x30	N3.75x30	N3.75x75	CSA5.0x40	N3.75x30
EWH	38 - 74	4	-	4	4	-	9.8	-	13.9	2.3 to 3.5	4.1	-	5.8	1.2 to 1.8
	75 - 100	4	-	4	4	-	9.8	13.5	13.9	2.3 to 3.5	4.1	5.6	5.8	1.2 to 1.8

(1) Depends upon joist type (refer to SIP performance tables for performance values per option).

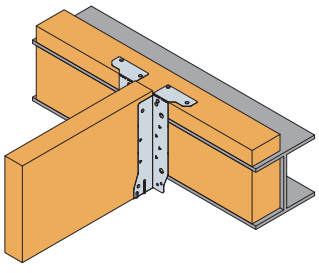

Typical Timber Nailer Installation

C-C-UK-2023 ©2023 SIMPSON STRONG-TIE COMPANY INC.

EWH Engineered Wood Hanger

SIP Headers

Performance Values: SIP Header Installation Options

References	Installation	Fasteners					Characteristic Capacities [kN]					
							$R_{1,k}$	$R_{2,k}$				
		Face (Flange B)		Top (Flange E)	Joist (Flange C)		Header Type	Joist Type				
		Ø5 Holes	Tri Holes	Ø5 Holes	Ø5 Holes	Tri Holes	SIP	LVL I-Joist 36mm	LVL I-Joist 39mm	SS I-Joist 45mm	Metal Web	Glulam, LVL, Solid Sawn
							CSA5.0x50	N3.75x30	N3.75x30	N3.75x30	N3.75x30	N3.75x30
EWH	11mm	4	-	-	4	-	9.7	2.3	2.5	3.5	3.5	3.5
	15mm	4	-	-	4	-	10.2	2.3	2.5	3.5	3.5	3.5

References	Installation	Fasteners					Safe Working Loads [kN]					
							$R_{1,SWL,LT}$	$R_{2,SWL,ST}$				
		Face (Flange B)		Top (Flange E)	Joist (Flange C)		Header Type	Joist Type				
		Ø5 Holes	Tri Holes	Ø5 Holes	Ø5 Holes	Tri Holes	SIP	LVL I-Joist 36mm	LVL I-Joist 39mm	SS I-Joist 45mm	Metal Web	Glulam, LVL, Solid Sawn
							CSA5.0x50	N3.75x30	N3.75x30	N3.75x30	N3.75x30	N3.75x30
EWH	11mm	4	-	-	4	-	4.0	1.2	1.3	1.8	1.8	1.8
	15mm	4	-	-	4	-	4.3	1.2	1.3	1.8	1.8	1.8

Note: SIP Panel requires a minimum 47mm deep toprail.

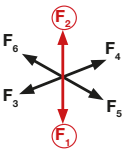

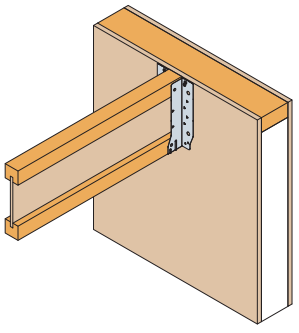

Typical SIP installation with I-Joist

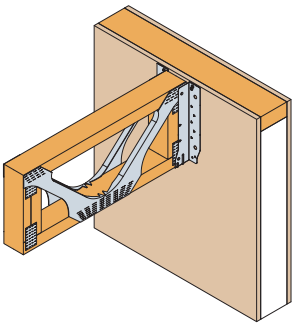

Typical SIP installation with Metal Web

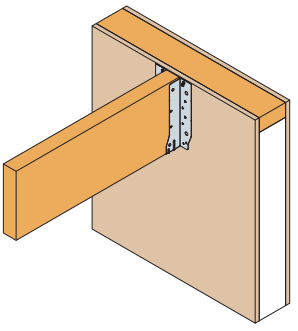

Typical SIP installation with Solid Joist

C-C-UK-2023 ©2023 SIMPSON STRONG-TIE COMPANY INC.

EWH Installation Instructions

EWH Standard Installation Instructions – Applicable to I-Joist, Metal Web Joist & Solid Timber Headers

1. Position EWH hanger onto the face of the supporting joist, ensuring the seat tab is tight up against the underside of the supporting joist.

   Ensure hanger sides are vertical; **fill all face round holes**, starting from bottom upwards, with the specified fastener.

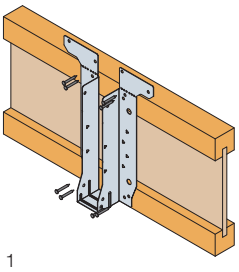
1

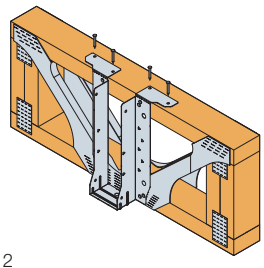
2

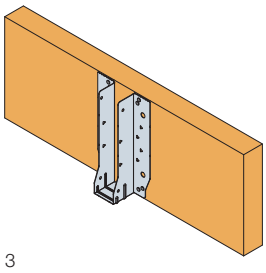
3

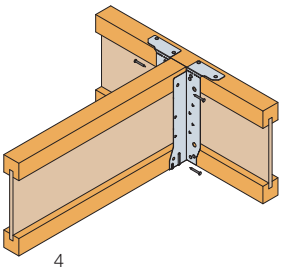
4

2. For top fix installation, fold over the top flange, ensuring a tight fold line along the top edge of the supporting timber, and **fill all top round holes** with the specified fasteners (NOTE: Depending upon the joist depth, the fold line may be up to 6mm above the perforation lines).
3. For face fix installations, snap off the top flange along the perforation line (NOTE: The top flange may be snapped off pre or post installation).
4. Insert the incoming joist, ensuring it is tight against the back of the EWH (maximum allowable gap is 3mm between end of incoming joist and face of hanger) and **fill all round holes** in the side flanges.

   For instances where the supporting member is deeper than the hanger, bend the seat tab upwards so the hanger fits tight against the face of the supporting member.

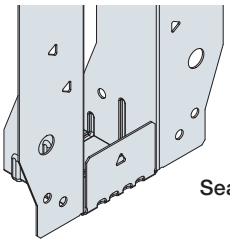
Seat tab bent upwards

EWH Enhanced Installation Instructions – Applicable to I-Joist Headers, Metal Web Headers & Solid Timber

1. Metal Web Headers Only: Install an 18mm plywood gusset to the face of the metal web joist. The plywood gusset is to be at least 400mm long and full depth of the metal web joist. The plywood gusset is installed with 8 No ESCR8.0x80mm screws. The screws are to be positioned in accordance to illustration below.

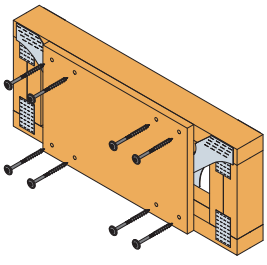

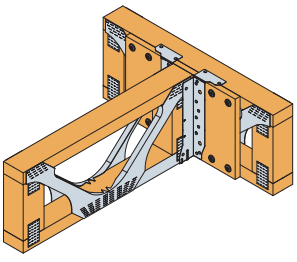

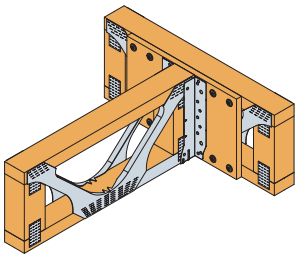

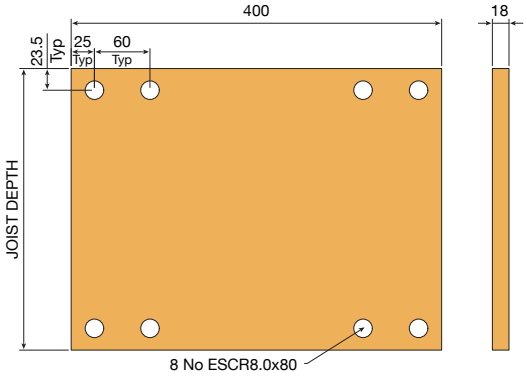

C-C-UK-2023 ©2023 SIMPSON STRONG-TIE COMPANY INC.

EWH Installation Instructions

2. I-Joist Headers Only: Install a backer block onto the front face of the I-Joist. The backer block's size and installation requirements shall be in accordance to the relevant I-Joist manufacturer's specifications.

   Position EWH hanger onto the face of the supporting joist, ensuring the seat tab is tight up against the underside of the supporting joist's bottom chord.

   Ensure hanger sides are vertical and **fill all face round holes then the triangular holes**, starting from bottom upwards, with the specified fastener.
3. For top fix installation, fold over the top flange, ensuring a tight fold line along the top edge of the supporting timber, and **fill the round holes** with the specified fasteners (NOTE: Depending upon joist depth, the fold line may be up to 6mm above the perforation lines).
4. For face fix installations, snap off the top flange along the perforation line (NOTE: The top flange may be snapped off pre or post installation).
5. Insert the incoming joist, ensuring it is tight against the back of the EWH (maximum allowable gap is 3mm between end of incoming joist and face of hanger) and **fill all round holes** in the side flanges.
6. For enhanced uplift installations, if the incoming joist is an I-Joist then web stiffeners are required. (The web stiffener's size and installation requirements shall be in accordance to relevant I-Joist manufacturer's specification). **Fill all round and triangular holes** with the relevant fastener.

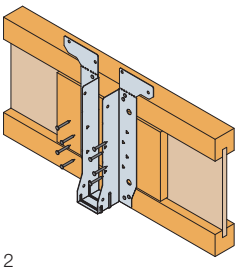
2

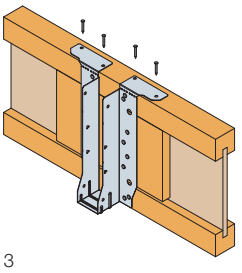
3

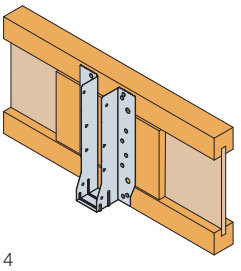
4

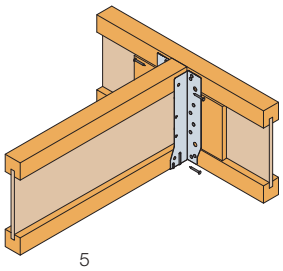
5

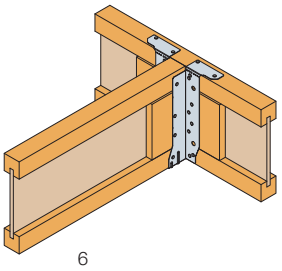
6

EWH Installation Instructions – SIP

1. It is recommended for SIP installation that the EWH is installed face fix only.
2. Bend the seat tab upwards so the hanger fits tight against the face of the SIP.
3. Position the EWH hanger onto the face of the SIP so that the top of the carried member will finish level with the top of the SIP.
4. Install 4 No CSA 5.0x50mm screws through the upper 4 round holes on the face of the EWH.
5. Tear off the hanger's top flange, along its perforation line.
6. Sit the carried member into the hanger and install 4 No 3.75x30mm square twist nails through the round holes into the side of the supported member.

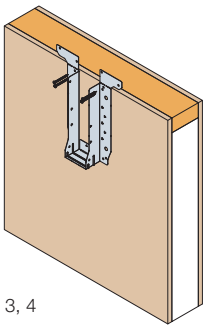
3, 4

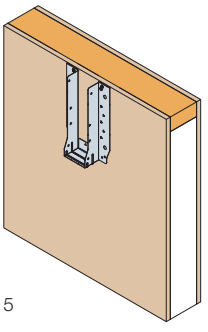
5

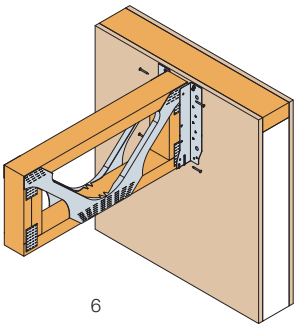
6

C-C-UK-2023 ©2023 SIMPSON STRONG-TIE COMPANY INC.

TCHI Top Chord Hung I-Joist Hanger

The TCHI is designed to support a modified I-Joist end (top hung detail), which aids the design, manufacture and installation of loose joists, or of cassette floors, on site.

- Reinforces the top chord of an I-Joist for top chord supported installations.
- Allows a gap of up to 15mm.
- Fixes to the I-Joist using screws to prevent splitting of the top chord.
- Seat stiffener provides strength and acts as a positioner for the end of the cut I-Joist.
- TCHI can be retro-fitted to installed I-Joists.

Material: Pre-galvanised mild steel.

Installation: Use all specified fasteners.

CSA RECOMMENDED FIXINGS

Performance Values

References	Number of Fasteners		Safe Working Loads [kN] $R_{1,SW,L,LT}$			Characteristic Capacities [kN] $R_{1,k}$		
	Qty	Type	36mm LVL I-Joist Flanges	39mm LVL I-Joist Flanges	> 44mm Solid Sawn I-Joist Flanges	36mm LVL I-Joist Flanges	39mm LVL I-Joist Flanges	> 44mm Solid Sawn I-Joist Flanges
TCHI (width < 98)	10	CSA4.0X30	3.8	3.8	3.8	9.0	9.0	9.0
TCHI (width = 99)	10	CSA4.0X30	4.8	5.0	5.0	11.5	12.0	12.0

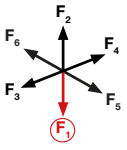

Standard Installation Sequence

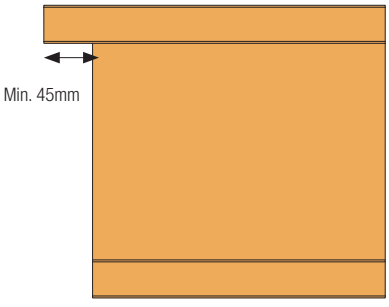

Step 1: Cut the end of the I-Joist so that the top chord overhangs by minimum of 45mm.

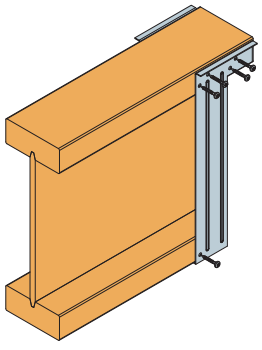

Step 2: Fix the hanger to the I-Joist using 10 No CSA4.0X30 screws.

The end of the I-Joist should be tight against the seat stiffener of the hanger.

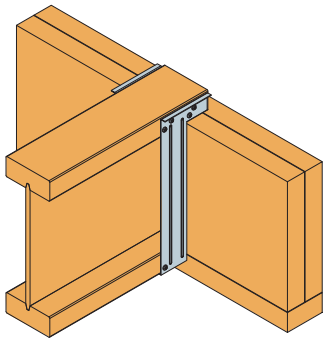

Step 3: Install the modified I-Joist into its intended position.

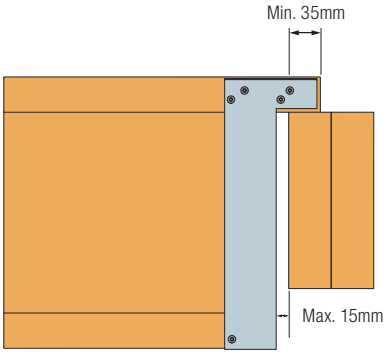

Step 3: Note the maximum gap between the end of the joist and the supporting member is 15mm. Minimum bearing onto the supporting member is 35mm.

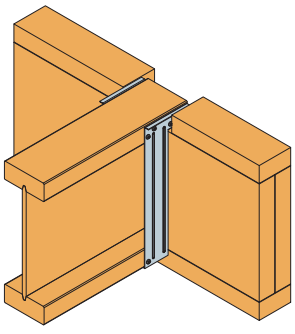

Step 4: Blocking pieces may be installed on top of the supporting member in-between the I-Joist flanges, to give a level finish.

C-C-UK-2023 ©2023 SIMPSON STRONG-TIE COMPANY INC.

TCHI Top Chord Hung I-Joist Hanger

SIMPSON Strong-Tie

Product Dimensions

References	Joist Size [mm]		Dimensions [mm]							Joist Holes
	Width	Height	A	B	C	D	E	F	t	Ø5
TCHI200/47	45	200	47	197	56	45	33	8.8	1.2	10
TCHI220/47	45	220	47	217	56	45	33	8.8	1.2	10
TCHI240/47	45	240	47	237	56	45	33	8.8	1.2	10
TCHI300/47	45	300	47	297	56	45	33	8.8	1.2	10
TCHI360/47	45	360	47	357	56	45	33	8.8	1.2	10
TCHI400/47	45	400	47	397	56	45	33	8.8	1.2	10
TCHI195/50	47	195	50	192	56	45	33	8.8	1.2	10
TCHI220/50	47	220	50	217	56	45	33	8.8	1.2	10
TCHI235/50	47	235	50	232	56	45	33	8.8	1.2	10
TCHI240/50	47	240	50	237	56	45	33	8.8	1.2	10
TCHI245/50	47	245	50	242	56	45	33	8.8	1.2	10
TCHI300/50	47	300	50	297	56	45	33	8.8	1.2	10
TCHI220/56	53	220	56	217	56	45	33	8.8	1.2	10
TCHI240/56	53	240	56	237	56	45	33	8.8	1.2	10
TCHI300/56	53	300	56	297	56	45	33	8.8	1.2	10
TCHI200/61	58	200	61	197	56	45	33	8.8	1.2	10
TCHI360/61	58	360	61	357	56	45	33	8.8	1.2	10
TCHI400/61	58	400	61	397	56	45	33	8.8	1.2	10
TCHI200/63	60	200	63	197	56	45	33	8.8	1.2	10
TCHI220/63	60	220	63	217	56	45	33	8.8	1.2	10
TCHI240/63	60	240	63	237	56	45	33	8.8	1.2	10
TCHI300/63	60	300	63	297	56	45	33	8.8	1.2	10
TCHI350/63	60	350	63	347	56	45	33	8.8	1.2	10
TCHI360/63	60	360	63	357	56	45	33	8.8	1.2	10
TCHI400/63	60	400	63	397	56	45	33	8.8	1.2	10
TCHI220/66	63	220	66	217	56	45	33	8.8	1.2	10
TCHI235/66	63	235	66	232	56	45	33	8.8	1.2	10
TCHI240/66	63	240	66	237	56	45	33	8.8	1.2	10
TCHI245/66	63	245	66	242	56	45	33	8.8	1.2	10
TCHI300/66	63	300	66	297	56	45	33	8.8	1.2	10
TCHI200/72	69 - 70	200	72	197	56	45	33	8.8	1.2	10
TCHI220/72	69 - 70	220	72	217	56	45	33	8.8	1.2	10
TCHI240/72	69 - 70	240	72	237	56	45	33	8.8	1.2	10
TCHI300/72	69 - 70	300	72	297	56	45	33	8.8	1.2	10
TCHI360/72	69 - 70	360	72	357	56	45	33	8.8	1.2	10
TCHI400/72	69 - 70	400	72	397	56	45	33	8.8	1.2	10
TCHI220/75	72	220	75	217	56	45	33	8.8	1.2	10
TCHI235/75	72	235	75	232	56	45	33	8.8	1.2	10
TCHI245/75	72	245	75	242	56	45	33	8.8	1.2	10
TCHI300/75	72	300	75	297	56	45	33	8.8	1.2	10
TCHI200/91	89 - 90	200	91	197	56	45	33	8.8	1.2	10
TCHI220/91	89 - 90	220	91	217	56	45	33	8.8	1.2	10
TCHI240/91	89 - 90	240	91	237	56	45	33	8.8	1.2	10
TCHI300/91	89 - 90	300	91	297	56	45	33	8.8	1.2	10
TCHI360/91	89 - 90	360	91	357	56	45	33	8.8	1.2	10
TCHI400/91	89 - 90	400	91	397	56	45	33	8.8	1.2	10
TCHI195/96	2x47	200	96	192	56	45	33	8.8	1.2	10
TCHI220/96	2x47	220	96	217	56	45	33	8.8	1.2	10
TCHI235/96	2x47	235	96	232	56	45	33	8.8	1.2	10
TCHI240/96	2x47	240	96	237	56	45	33	8.8	1.2	10
TCHI245/96	2x47	245	96	242	56	45	33	8.8	1.2	10
TCHI300/96	2x47	300	96	297	56	45	33	8.8	1.2	10
TCHI220/99	96 - 97	220	99	217	56	45	33	8.8	1.2	10
TCHI235/99	96 - 97	235	99	232	56	45	33	8.8	1.2	10
TCHI240/99	96 - 97	240	99	237	56	45	33	8.8	1.2	10
TCHI245/99	96 - 97	245	99	242	56	45	33	8.8	1.2	10
TCHI300/99	96 - 97	300	99	297	56	45	33	8.8	1.2	10
TCHI350/99	96 - 97	360	99	347	56	45	33	8.8	1.2	10
TCHI400/99	96 - 97	400	99	397	56	45	33	8.8	1.2	10

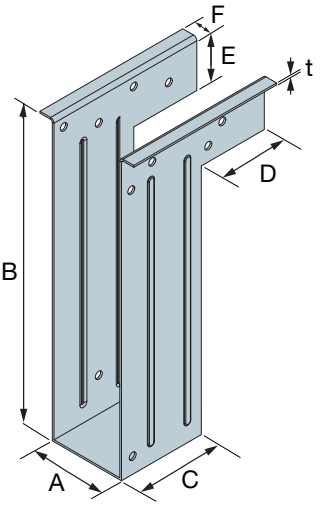

C-C-UK-2023 ©2023 SIMPSON STRONG-TIE COMPANY INC.

HITB Backer Free, Top Flange I-Joist Hanger

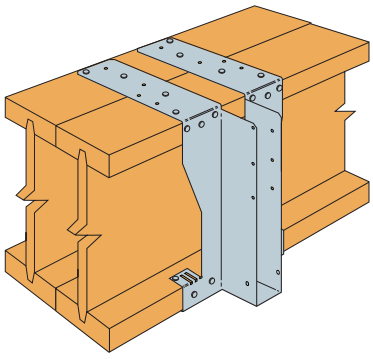

The HITB hanger eliminates the requirement for backer blocks when supported from an I-Joist header. The bottom flange location tabs and an open top flange provide enhanced capacity and improved ease of installation.

- Eliminates the need for backer blocks with an I-Joist to I-Joist connection.
- Bottom flange location tabs quickly set the hanger onto the I-Joist header.
- Open top flange improves ease of installation.
- Optional nail holes for additional download and uplift capacity.

Material: Pre-galvanised mild steel.

HITB Installation:

- Designed for use with multiple headers.
- Ensure the supporting I-Joists are connected together in accordance with the manufacturer's recommended connection methods, i.e. MJC connectors, or filler blocks.
- Position the HITB hanger onto the face of the supporting I-Joists, ensuring the bottom flanges are tight up against the underside of the bottom chord.
- Fill all face round and obround holes with nails. Install nails into the holes within the bottom flanges.
- Flatten the hanger's open flanges to the top chords of the supporting I-Joists and install a minimum of 4 nails per flange, 2 to the front and 2 to the rear of the joists.
- Bend the bottom chord tabs over the top face of the bottom chord and install nails through the obround holes into the the top face of the bottom chord.
- Sit the carried joist into the HITB hanger and install the nails through the round and obround holes into the joist.
- Carried I-Joists require web stiffeners.

STN RECOMMENDED FIXINGS

Product Dimensions

References	Joist Size [mm]		Hanger Dimensions [mm]							Header Holes		Joist Holes	
	Width	Height	A	B	C	D	E	F	t	Ø4	Triangle	Ø4	Ø6 x 4 Obround
HITB200/40	39	200	40	200	60	65	180	81	2	28	4	6	2
HITB220/40	39	220	40	220	60	65	180	81	2	28	4	6	2
HITB240/40	39	240	40	240	60	65	180	81	2	28	4	6	2
HITB300/40	39	300	40	300	60	65	180	81	2	28	4	6	2
HITB200/47	45	200	47	200	60	65	180	81	2	28	4	6	2
HITB220/47	45	220	47	220	60	65	180	81	2	28	4	6	2
HITB240/47	45	240	47	240	60	65	180	81	2	28	4	6	2
HITB300/47	45	300	47	300	60	65	180	81	2	28	4	6	2
HITB220/56	53	220	56	220	60	65	180	81	2	28	4	6	2
HITB240/56	53	240	56	240	60	65	180	81	2	28	4	6	2
HITB300/56	53	300	56	300	60	65	180	81	2	28	4	6	2
HITB200/61	58	200	61	200	60	65	180	81	2	28	4	6	2
HITB200/63	60	200	63	200	60	65	180	81	2	28	4	6	2
HITB220/63	60	220	63	220	60	65	180	81	2	28	4	6	2
HITB240/63	60	240	63	240	60	65	180	81	2	28	4	6	2
HITB300/63	60	300	63	300	60	65	180	81	2	28	4	6	2
HITB200/72	69	200	72	200	60	65	180	81	2	28	4	6	2
HITB220/72	69	220	72	220	60	65	180	81	2	28	4	6	2
HITB240/72	69	240	72	240	60	65	180	81	2	28	4	6	2
HITB300/72	69	300	72	300	60	65	180	81	2	28	4	6	2
HITB200/78	75 I 2x38	200	78	200	60	65	180	81	2	28	4	6	2
HITB220/78	75 I 2x38	220	78	220	60	65	180	81	2	28	4	6	2
HITB240/78	75 I 2x38	240	78	240	60	65	180	81	2	28	4	6	2
HITB300/78	75 I 2x38	300	78	300	60	65	180	81	2	28	4	6	2

C-C-UK-2023 ©2023 SIMPSON STRONG-TIE COMPANY INC.

HITB Backer Free, Top Flange I-Joist Hanger

SIMPSON Strong-Tie

Product Dimensions

References	Joist Size [mm]		Hanger Dimensions [mm]							Header Holes		Joist Holes	
	Width	Height	A	B	C	D	E	F	t	Ø4	Triangle	Ø4	Ø6 x 4 Obround
HITB200/91	89 I 90 I 2x45	200	91	200	60	65	180	81	2	28	4	6	2
HITB220/91	89 I 90 I 2x45	220	91	220	60	65	180	81	2	28	4	6	2
HITB240/91	89 I 90 I 2x45	240	91	240	60	65	180	81	2	28	4	6	2
HITB300/91	89 I 90 I 2x45	300	91	300	60	65	180	81	2	28	4	6	2
HITB220/99	96	220	99	220	60	65	180	81	2	28	4	6	2
HITB240/99	96	240	99	240	60	65	180	81	2	28	4	6	2
HITB300/99	96	300	99	300	60	65	180	81	2	28	4	6	2
HITB220/109	2x53	220	109	220	60	65	180	81	2	28	4	6	2
HITB240/109	2x53	240	109	240	60	65	180	81	2	28	4	6	2
HITB300/109	2x53	300	109	300	60	65	180	81	2	28	4	6	2
HITB200/122	2x60	200	122	200	60	65	180	81	2	28	4	6	2
HITB220/122	2x60	220	122	220	60	65	180	81	2	28	4	6	2
HITB240/122	2x60	240	122	240	60	65	180	81	2	28	4	6	2
HITB300/122	2x60	300	122	300	60	65	180	81	2	28	4	6	2
HITB-LT195/40	38 I 39	195	40	195	60	65	180	81	2	28	4	6	2
HITB-LT220/40	38 I 39	220	40	220	60	65	180	81	2	28	4	6	2
HITB-LT235/40	38 I 39	235	40	235	60	65	180	81	2	28	4	6	2
HITB-LT240/40	38 I 39	240	40	240	60	65	180	81	2	28	4	6	2
HITB-LT245/40	38 I 39	245	40	245	60	65	180	81	2	28	4	6	2
HITB-LT300/40	38 I 39	300	40	300	60	65	180	81	2	28	4	6	2
HITB-LT195/47	45	195	47	195	60	65	180	81	2	28	4	6	2
HITB-LT220/47	45	220	47	220	60	65	180	81	2	28	4	6	2
HITB-LT235/47	45	235	47	235	60	65	180	81	2	28	4	6	2
HITB-LT240/47	45	240	47	240	60	65	180	81	2	28	4	6	2
HITB-LT245/47	45	245	47	245	60	65	180	81	2	28	4	6	2
HITB-LT300/47	45	300	47	300	60	65	180	81	2	28	4	6	2
HITB-LT195/50	47	195	50	195	60	65	180	81	2	28	4	6	2
HITB-LT220/50	47	220	50	220	60	65	180	81	2	28	4	6	2
HITB-LT235/50	47	235	50	235	60	65	180	81	2	28	4	6	2
HITB-LT240/50	47	240	50	240	60	65	180	81	2	28	4	6	2
HITB-LT245/50	47	245	50	245	60	65	180	81	2	28	4	6	2
HITB-LT300/50	47	300	50	300	60	65	180	81	2	28	4	6	2
HITB-LT220/63	60	220	63	220	60	65	180	81	2	28	4	6	2
HITB-LT240/63	60	240	63	240	60	65	180	81	2	28	4	6	2
HITB-LT300/63	60	300	63	300	60	65	180	81	2	28	4	6	2
HITB-LT220/66	63	220	66	220	60	65	180	81	2	28	4	6	2
HITB-LT235/66	63	235	66	235	60	65	180	81	2	28	4	6	2
HITB-LT240/66	63	240	66	240	60	65	180	81	2	28	4	6	2
HITB-LT245/66	63	245	66	245	60	65	180	81	2	28	4	6	2
HITB-LT300/66	63	300	66	300	60	65	180	81	2	28	4	6	2
HITB-LT220/72	70	220	72	220	60	65	180	81	2	28	4	6	2
HITB-LT240/72	70	240	72	240	60	65	180	81	2	28	4	6	2
HITB-LT300/72	70	300	72	300	60	65	180	81	2	28	4	6	2
HITB-LT220/75	72	220	75	220	60	65	180	81	2	28	4	6	2
HITB-LT235/75	72	235	75	235	60	65	180	81	2	28	4	6	2
HITB-LT245/75	72	245	75	245	60	65	180	81	2	28	4	6	2
HITB-LT300/75	72	300	75	300	60	65	180	81	2	28	4	6	2

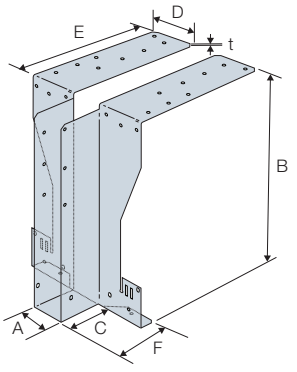

C-C-UK-2023 ©2023 SIMPSON STRONG-TIE COMPANY INC.

HITB Backer Free, Top Flange I-Joist Hanger

SIMPSON Strong-Tie®

Product Dimensions

References	Joist Size [mm]		Hanger Dimensions [mm]							Header Holes		Joist Holes	
	Width	Height	A	B	C	D	E	F	t	Ø4	Triangle	Ø4	Ø6 x 4 Oround
HITB-LT195/78	75 I 2x38 I 2x39	195	78	195	60	65	180	81	2	28	4	6	2
HITB-LT220/78	75 I 2x38 I 2x39	220	78	220	60	65	180	81	2	28	4	6	2
HITB-LT235/78	75 I 2x38 I 2x39	235	78	235	60	65	180	81	2	28	4	6	2
HITB-LT240/78	75 I 2x38 I 2x39	240	78	240	60	65	180	81	2	28	4	6	2
HITB-LT245/78	75 I 2x38 I 2x39	245	78	245	60	65	180	81	2	28	4	6	2
HITB-LT300/78	75 I 2x38 I 2x39	300	78	300	60	65	180	81	2	28	4	6	2
HITB-LT195/96	2x47	195	96	195	60	65	180	81	2	28	4	6	2
HITB-LT220/96	2x47	220	96	220	60	65	180	81	2	28	4	6	2
HITB-LT235/96	2x47	235	96	235	60	65	180	81	2	28	4	6	2
HITB-LT240/96	2x47	240	96	240	60	65	180	81	2	28	4	6	2
HITB-LT245/96	2x47	245	96	245	60	65	180	81	2	28	4	6	2
HITB-LT300/96	2x47	300	96	300	60	65	180	81	2	28	4	6	2
HITB-LT220/99	97	220	99	220	60	65	180	81	2	28	4	6	2
HITB-LT235/99	97	235	99	235	60	65	180	81	2	28	4	6	2
HITB-LT240/99	97	240	99	240	60	65	180	81	2	28	4	6	2
HITB-LT245/99	97	245	99	245	60	65	180	81	2	28	4	6	2
HITB-LT300/99	97	300	99	300	60	65	180	81	2	28	4	6	2
HITB-LT220/122	2x60	220	122	220	60	65	180	81	2	28	4	6	2
HITB-LT240/122	2x60	240	122	240	60	65	180	81	2	28	4	6	2
HITB-LT300/122	2x60	300	122	300	60	65	180	81	2	28	4	6	2
HITB-LT220/128	2x63	220	128	220	60	65	180	81	2	28	4	6	2
HITB-LT235/128	2x63	235	128	235	60	65	180	81	2	28	4	6	2
HITB-LT240/128	2x63	240	128	240	60	65	180	81	2	28	4	6	2
HITB-LT245/128	2x63	245	128	245	60	65	180	81	2	28	4	6	2
HITB-LT300/128	2x63	300	128	300	60	65	180	81	2	28	4	6	2

Performance Values

References	Fasteners				Safe Working Loads [kN]				Characteristic Capacities [kN]			
	Header			Joist	$R_{1,SWL,Long\ Term}$		$R_{2,SWL,Short\ Term}$		$R_{1,K}$		$R_{2,K}$	
	Top	Face	Bottom	Qty	I-Joist Headers with LVLFlanges ≥ 35mm	I-Joist Headers with Solid Sawn Flanges ≥ 45mm	I-Joist Headers with LVL Flanges ≥ 35mm	I-Joist Headers with Solid Sawn Flanges ≥ 45mm	I-Joist Headers with LVL Flanges ≥ 35mm	I-Joist Headers with Solid Sawn Flanges ≥ 45mm	I-Joist Headers with LVL Flanges ≥ 35mm	I-Joist Headers with Solid Sawn Flanges ≥ 45mm
	Qty	Qty	Qty		N3.75x30	N3.75x30	N3.75x30	N3.75x30	N3.75x30	N3.75x30	N3.75x30	N3.75x30
HITB	8	12	2	8	8.0	-	3.6	-	17.5	-	11.4	-
HITB-LT	8	12	2	8	-	8.1	-	4.6	-	19.1	-	11.1

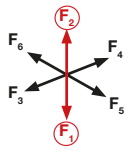

C-C-UK-2023 ©2023 SIMPSON STRONG-TIE COMPANY INC.

HIUQ Engineered Joist to SIP Panel Hanger

The HIUQ is the first hanger specifically designed to allow engineered joists to be face fixed to a Structural Insulated Panel (SIP), when used in conjunction with SSH screws (supplied with hangers).

- The HIUQ can be used with either metal web or engineered I-Joists.
- Joists no longer sit on top of the wall, thus eliminating thermal bridging at the joist/wall junction.
- Cuts down on the time consuming and costly process of placing timber blocking pieces between the joists and the wall panels, creating a better air seal.
- Installation is simple and efficient, requiring 4 No SSH screws.

Material: Pre-galvanised mild steel.

SSH RECOMMENDED FIXINGS

Product Dimensions

References	Joist Size [mm]		Dimensions [mm]							Header Holes	Joist Holes	
	Width	Height										
	Min	Min	A	B	C	D	E	F	t	Ø6.2	Ø4.1	Ø6x4 Obround
HIUQ195/75SCR	72	195	75	195	63	64	64	66	2	4	6	2
HIUQ202/75SCR	72	202	75	202	63	64	64	66	2	4	6	2
HIUQ219/75SCR	72	219	75	219	63	64	64	66	2	4	6	2
HIUQ225/75SCR	72	225	75	225	63	64	64	66	2	4	6	2
HIUQ254/75SCR	72	253 I 254	75	254	63	64	64	66	2	4	6	2
HIUQ304/75SCR	72	304	75	304	63	64	64	66	2	4	6	2
HIUQ373/75SCR	72	373	75	373	63	64	64	66	2	4	6	2
HIUQ418/75SCR	72	417 I 418	75	418	63	64	64	66	2	4	6	2
HIUQ421/75SCR	72	421	75	421	63	64	64	66	2	4	6	2
HIUQ195/99SCR	97	195	99	195	63	64	64	66	2	4	6	2
HIUQ202/99SCR	97	202	99	202	63	64	64	66	2	4	6	2
HIUQ219/99SCR	97	219	99	219	63	64	64	66	2	4	6	2
HIUQ225/99SCR	97	225	99	225	63	64	64	66	2	4	6	2
HIUQ254/99SCR	97	253 I 254	99	254	63	64	64	66	2	4	6	2
HIUQ304/99SCR	97	304	99	304	63	64	64	66	2	4	6	2
HIUQ373/99SCR	97	373	99	373	63	64	64	66	2	4	6	2
HIUQ418/99SCR	97	417 I 418	99	418	63	64	64	66	2	4	6	2
HIUQ421/99SCR	97	421	99	421	63	64	64	66	2	4	6	2
HIUQ195/125SCR	122	195	125	195	63	64	64	66	2	4	6	2
HIUQ202/125SCR	122	202	125	202	63	64	64	66	2	4	6	2
HIUQ219/125SCR	122	219	125	219	63	64	64	66	2	4	6	2
HIUQ225/125SCR	122	225	125	225	63	64	64	66	2	4	6	2
HIUQ254/125SCR	122	253 I 254	125	254	63	64	64	66	2	4	6	2
HIUQ304/125SCR	122	304	125	304	63	64	64	66	2	4	6	2
HIUQ373/125SCR	122	373	125	373	63	64	64	66	2	4	6	2
HIUQ418/125SCR	122	417 I 418	125	418	63	64	64	66	2	4	6	2
HIUQ421/125SCR	122	421	125	421	63	64	64	66	2	4	6	2
HIUQ195/146SCR	2x72	195	146	195	63	64	64	66	2	4	6	2
HIUQ202/146SCR	2x72	202	146	202	63	64	64	66	2	4	6	2
HIUQ219/146SCR	2x72	219	146	219	63	64	64	66	2	4	6	2
HIUQ225/146SCR	2x72	225	146	225	63	64	64	66	2	4	6	2
HIUQ254/146SCR	2x72	253 I 254	146	254	63	64	64	66	2	4	6	2
HIUQ304/146SCR	2x72	304	146	304	63	64	64	66	2	4	6	2
HIUQ373/146SCR	2x72	373	146	373	63	64	64	66	2	4	6	2
HIUQ418/146SCR	2x72	417 I 418	146	418	63	64	64	66	2	4	6	2
HIUQ421/146SCR	2x72	421	146	421	63	64	64	66	2	4	6	2
HIUQ195/150SCR	147	195	150	195	63	64	64	66	2	4	6	2
HIUQ202/150SCR	147	202	150	202	63	64	64	66	2	4	6	2
HIUQ220/150SCR	147	219	150	219	63	64	64	66	2	4	6	2
HIUQ225/150SCR	147	225	150	225	63	64	64	66	2	4	6	2

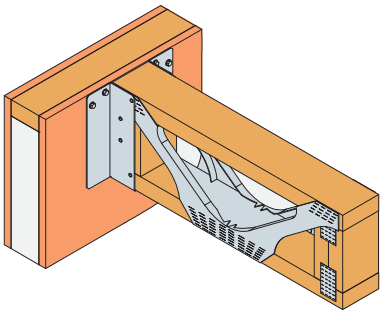

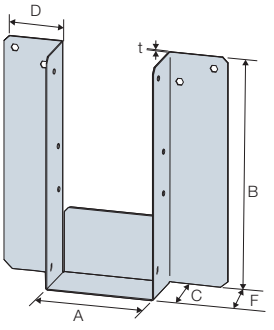

C-C-UK-2023 ©2023 SIMPSON STRONG-TIE COMPANY INC.

HIUQ Engineered Joist to SIP Panel Hanger

SIMPSON Strong-Tie

Product Dimensions

References	Joist Size [mm]		Dimensions [mm]							Header Holes	Joist Holes	
	Width	Height										
	Min	Min	A	B	C	D	E	F	t	Ø6.2	Ø4.1	Ø6x4 Obround
HIUQ254/150SCR	147	253 | 254	150	254	63	64	64	66	2	4	6	2
HIUQ304/150SCR	147	304	150	304	63	64	64	66	2	4	6	2
HIUQ373/150SCR	147	373	150	373	63	64	64	66	2	4	6	2
HIUQ418/150SCR	147	417 | 418	150	418	63	64	64	66	2	4	6	2
HIUQ421/150SCR	147	421	150	421	63	64	64	66	2	4	6	2
HIUQ195/196SCR	2x97	195	196	195	63	64	64	66	2	4	6	2
HIUQ202/196SCR	2x97	202	196	202	63	64	64	66	2	4	6	2
HIUQ219/196SCR	2x97	219	196	219	63	64	64	66	2	4	6	2
HIUQ225/196SCR	2x97	225	196	225	63	64	64	66	2	4	6	2
HIUQ254/196SCR	2x97	253 | 254	196	254	63	64	64	66	2	4	6	2
HIUQ304/196SCR	2x97	304	196	304	63	64	64	66	2	4	6	2
HIUQ373/196SCR	2x97	373	196	373	63	64	64	66	2	4	6	2
HIUQ418/196SCR	2x97	417 | 418	196	418	63	64	64	66	2	4	6	2
HIUQ421/196SCR	2x97	421	196	421	63	64	64	66	2	4	6	2
HIUQ195/246SCR	2x122	195	246	195	63	64	64	66	2	4	6	2
HIUQ202/246SCR	2x122	202	246	202	63	64	64	66	2	4	6	2
HIUQ219/246SCR	2x122	219	246	219	63	64	64	66	2	4	6	2
HIUQ225/246SCR	2x122	225	246	225	63	64	64	66	2	4	6	2
HIUQ254/246SCR	2x122	253 | 254	246	254	63	64	64	66	2	4	6	2
HIUQ304/246SCR	2x122	304	246	304	63	64	64	66	2	4	6	2
HIUQ373/246SCR	2x122	373	246	373	63	64	64	66	2	4	6	2
HIUQ418/246SCR	2x122	417 | 418	246	418	63	64	64	66	2	4	6	2
HIUQ421/246SCR	2x122	421	246	421	63	64	64	66	2	4	6	2
HIUQ195/296SCR	2x147	195	296	195	63	64	64	66	2	4	6	2
HIUQ202/296SCR	2x147	202	296	202	63	64	64	66	2	4	6	2
HIUQ219/296SCR	2x147	219	296	219	63	64	64	66	2	4	6	2
HIUQ225/296SCR	2x147	225	296	225	63	64	64	66	2	4	6	2
HIUQ254/296SCR	2x147	235 | 254	296	254	63	64	64	66	2	4	6	2
HIUQ304/296SCR	2x147	304	296	304	63	64	64	66	2	4	6	2
HIUQ373/296SCR	2x147	373	296	373	63	64	64	66	2	4	6	2
HIUQ418/296SCR	2x147	417 | 418	296	418	63	64	64	66	2	4	6	2
HIUQ421/296SCR	2x147	421	296	421	63	64	64	66	2	4	6	2

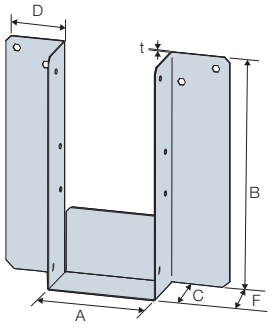

Performance Values

References	Fasteners				Safe Working Loads [kN]		Characteristic Capacities [kN]	
	Header		Joist					
	Qty	Type	Qty	Type	$R_{1,SWL,Long\ term}$	$R_{2,SWL,Short\ Term}$	$R_{1,K}$	$R_{2,K}$
HIUQ	4	SSH6.0X60	8	N3.75 x 30	7.5	4.0	18.1	8.0

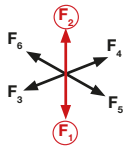

Hanger supplied with SSH6.0X60 header screws

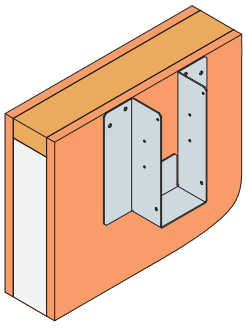

HIUQ Step 1:
Position the top of the HIUQ hanger side flanges level with the top of the SIP panel.

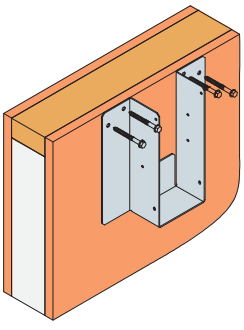

HIUQ Step 2:
Install 4 No SSH screws into the top hexagonal holes only.

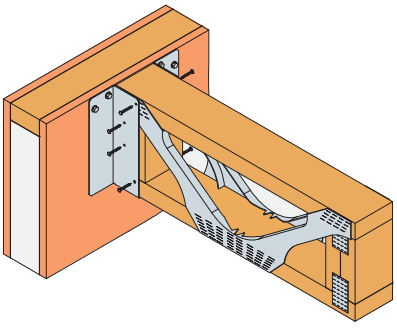

HIUQ Step 3:
Sit the joist onto the HIUQ hanger and install 8 No 3.75 x 30mm square twist nails into the joist.

C-C-UK-2023 ©2023 SIMPSON STRONG-TIE COMPANY INC.

ITBS Backer Free, I-Joist Hanger with Adjustable Skew

The ITBS solves the problem of skew hangers in I-Joist to I-Joist connections. It can be handed left or right on site by the carpenter, removing confusion when the floor is built opposite to the drawing. The ITBS is fully adjustable from 5° to 67.5° skew, reducing the need for 'special' skew hangers. Finally, the ITBS is a backer free hanger removing the need for backer blocks in standard installation. This solution reduces building cost, installation time and stock holding.

- Standard 45° skew, with site adjustable skew from 5° to 67.5°.
- Non-handed hanger, can be left or right skew-adjusted on site, removing any handing confusion and reducing stock holding.
- Eliminates the need for backer blocks when supported from an I-Joist header.
- Open top flange improves ease-of-installation.
- Can be used on I-Joist or solid joist headers.
- Optional nail holes for additional download capacity.

Material: Pre-galvanised mild steel.

STN RECOMMENDED FIXINGS

Product Dimensions

References	Joist Size [mm]		Hanger Dimensions [mm]						Header Holes			Joist Holes	
	Width (Min)	Height (Min)	A	B	C	D	E	t	Ø4	Triangular	Ø6 x 4 Obround	Ø6 x 4 Obround	Triangular
ITBS195/40	38 | 39	195	40	195	64	55	37	1.5	10	10	2	2	4
ITBS200/40	38 | 39	200	40	200	64	55	37	1.5	10	10	2	2	4
ITBS220/40	38 | 39	220	40	220	64	55	37	1.5	10	10	2	2	4
ITBS235/40	38 | 39	235	40	235	64	55	37	1.5	10	10	2	2	4
ITBS240/40	38 | 39	240	40	240	64	55	37	1.5	10	10	2	2	4
ITBS245/40	38 | 39	245	40	245	64	55	37	1.5	10	10	2	2	4
ITBS300/40	38 | 39	300	40	300	64	55	37	1.5	10	10	2	2	4
ITBS195/47	45	195	47	195	64	55	37	1.5	10	10	2	2	4
ITBS200/47	45	200	47	200	64	55	37	1.5	10	10	2	2	4
ITBS220/47	45	220	47	220	64	55	37	1.5	10	10	2	2	4
ITBS235/47	45	235	47	235	64	55	37	1.5	10	10	2	2	4
ITBS240/47	45	240	47	240	64	55	37	1.5	10	10	2	2	4
ITBS245/47	45	245	47	245	64	55	37	1.5	10	10	2	2	4
ITBS300/47	45	300	47	300	64	55	37	1.5	10	10	2	2	4
ITBS195/50	47	195	50	195	64	55	37	1.5	10	10	2	2	4
ITBS220/50	47	220	50	220	64	55	37	1.5	10	10	2	2	4
ITBS235/50	47	235	50	235	64	55	37	1.5	10	10	2	2	4
ITBS240/50	47	240	50	240	64	55	37	1.5	10	10	2	2	4
ITBS245/50	47	245	50	245	64	55	37	1.5	10	10	2	2	4
ITBS300/50	47	300	50	300	64	55	37	1.5	10	10	2	2	4
ITBS220/56	53	220	56	220	64	55	37	1.5	10	10	2	2	4
ITBS240/56	53	240	56	240	64	55	37	1.5	10	10	2	2	4
ITBS300/56	53	300	56	300	64	55	37	1.5	10	10	2	2	4
ITBS200/61	58	200	61	200	64	55	37	1.5	10	10	2	2	4
ITBS200/63	60	200	63	200	64	55	37	1.5	10	10	2	2	4
ITBS220/63	60	220	63	220	64	55	37	1.5	10	10	2	2	4
ITBS240/63	60	240	63	240	64	55	37	1.5	10	10	2	2	4
ITBS300/63	60	300	63	300	64	55	37	1.5	10	10	2	2	4
ITBS220/66	63	220	66	220	64	55	37	1.5	10	10	2	2	4
ITBS235/66	63	235	66	235	64	55	37	1.5	10	10	2	2	4
ITBS240/66	63	240	66	240	64	55	37	1.5	10	10	2	2	4
ITBS245/66	63	245	66	245	64	55	37	1.5	10	10	2	2	4

C-C-UK-2023 ©2023 SIMPSON STRONG-TIE COMPANY INC.

ITBS Backer Free, I-Joist Hanger with Adjustable Skew

SIMPSON Strong-Tie®

Product Dimensions

References	Joist Size [mm]		Hanger Dimensions [mm]						Header Holes			Joist Holes	
	Width (Min)	Height (Min)	A	B	C	D	E	t	Ø4	Triangular	Ø6 x 4 Obround	Ø6 x 4 Obround	Triangular
ITBS300/66	63	300	66	300	64	55	37	1.5	10	10	2	2	4
ITBS200/72	69 I 70	200	72	200	64	55	37	1.5	10	10	2	2	4
ITBS220/72	69 I 70	220	72	220	64	55	37	1.5	10	10	2	2	4
ITBS240/72	69 I 70	240	72	240	64	55	37	1.5	10	10	2	2	4
ITBS300/72	69 I 70	300	72	300	64	55	37	1.5	10	10	2	2	4
ITBS220/75	72	220	75	220	64	55	37	1.5	10	10	2	2	4
ITBS235/75	72	235	75	235	64	55	37	1.5	10	10	2	2	4
ITBS245/75	72	245	75	245	64	55	37	1.5	10	10	2	2	4
ITBS300/75	72	300	75	300	64	55	37	1.5	10	10	2	2	4
ITBS195/78	75 I 2x38 I 2x39	195	78	195	64	55	37	1.5	10	10	2	2	4
ITBS200/78	75 I 2x38 I 2x39	200	78	200	64	55	37	1.5	10	10	2	2	4
ITBS220/78	75 I 2x38 I 2x39	220	78	220	64	55	37	1.5	10	10	2	2	4
ITBS235/78	75 I 2x38 I 2x39	235	78	235	64	55	37	1.5	10	10	2	2	4
ITBS240/78	75 I 2x38 I 2x39	240	78	240	64	55	37	1.5	10	10	2	2	4
ITBS245/78	75 I 2x38 I 2x39	245	78	245	64	55	37	1.5	10	10	2	2	4
ITBS300/78	75 I 2x38 I 2x39	300	78	300	64	55	37	1.5	10	10	2	2	4
ITBS195/91	89 I 90 I 2x45	195	91	195	64	55	37	1.5	10	10	2	2	4
ITBS200/91	89 I 90 I 2x45	200	91	200	64	55	37	1.5	10	10	2	2	4
ITBS220/91	89 I 90 I 2x45	220	91	220	64	55	37	1.5	10	10	2	2	4
ITBS235/91	89 I 90 I 2x45	235	91	235	64	55	37	1.5	10	10	2	2	4
ITBS240/91	89 I 90 I 2x45	240	91	240	64	55	37	1.5	10	10	2	2	4
ITBS245/91	89 I 90 I 2x45	245	91	245	64	55	37	1.5	10	10	2	2	4
ITBS300/91	89 I 90 I 2x45	300	91	300	64	55	37	1.5	10	10	2	2	4
ITBS195/96	2x47	195	96	195	64	55	37	1.5	10	10	2	2	4
ITBS220/96	2x47	220	96	220	64	55	37	1.5	10	10	2	2	4
ITBS235/96	2x47	235	96	235	64	55	37	1.5	10	10	2	2	4
ITBS240/96	2x47	240	96	240	64	55	37	1.5	10	10	2	2	4
ITBS245/96	2x47	245	96	245	64	55	37	1.5	10	10	2	2	4
ITBS300/96	2x47	300	96	300	64	55	37	1.5	10	10	2	2	4
ITBS220/99	96 I 97	220	99	220	64	55	37	1.5	10	10	2	2	4
ITBS235/99	96 I 97	235	99	235	64	55	37	1.5	10	10	2	2	4
ITBS240/99	96 I 97	240	99	240	64	55	37	1.5	10	10	2	2	4
ITBS245/99	96 I 97	245	99	245	64	55	37	1.5	10	10	2	2	4
ITBS300/99	96 I 97	300	99	300	64	55	37	1.5	10	10	2	2	4

Performance Values

References	Installation	Fasteners				Safe Working Loads [kN]			Characteristic Capacities [kN]		
		Header			Joist	$R_{1,\ SWL\ Long\ Term}$		$R_{2,\ Short\ Term}$	$R_{1,K}$		$R_{2,K}$
						I-Joist Headers with LVL Flanges ≥ 35mm	I-Joist Headers with Solid Sawn Flanges ≥ 45mm		I-Joist Headers with LVL Flanges ≥ 35mm	I-Joist Headers with Solid Sawn Flanges ≥ 45mm	
		Top Qty	Face Qty	Bottom Qty	Qty	N3.75X30	N3.75X30	N3.75X30	N3.75X30	N3.75X30	N3.75X30
ITBS	Standard	2	8	2	1	3.7	2.1	0.7	10.2	7.4	1.5
ITBS	Enhanced	2	18	2	3	5.5	6.3	0.7	15.0	12.8	1.5

Enhanced installation onto I-Joist headers requires the header to have backer blocks installed and web stiffeners installed on a carried I-Joist. Backer blocks and web stiffeners to be in accordance to relevant I-Joist manufacturer's requirements.

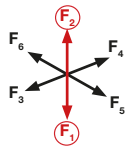

C-C-UK-2023 ©2023 SIMPSON STRONG-TIE COMPANY INC.

ITBS Backer Free, I-Joist Hanger with Adjustable Skew

SIMPSON Strong-Tie®

Angle Guide

50mm Back Plate		100mm Back Plate	
Skew Angle (α)	Distance [mm] (χ)	Skew Angle (α)	Distance [mm] (χ)
5°	106	5°	206
15°	104	15°	200
22.5°	100	22.5°	190
30°	95	30°	180
37.5°	87	37.5°	166
45°	79	45°	149
52.5°	69	52.5°	130
60°	58	60°	109
67.5°	46	67.5°	86

Note: see installation sequence below.

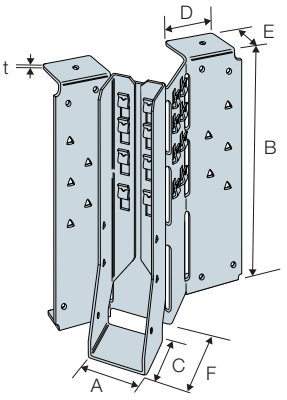

Standard ITBS Installation

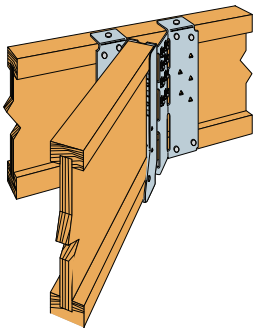

Enhanced ITBS Installation

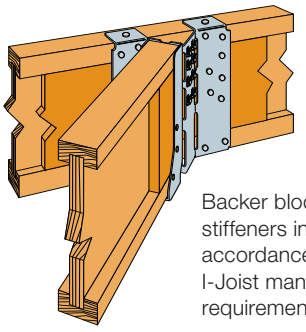

Backer blocks and web stiffeners installed in accordance with the I-Joist manufacturer's requirements.

Standard Installation Sequence

Step 1:
Position the back plate onto the header in the required position. Ensure backer blocks are fitted if enhanced performance is required. Secure the acute side of the backplate (inside angle) with the specified nails.

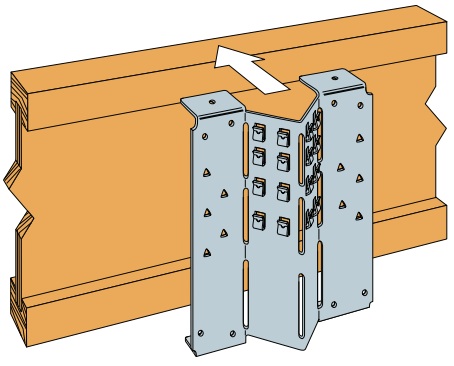

Step 2:
Adjust the angle of the backplate (if different from 45°) to suit the required angle. Use either an adjustable set square or the guide tables shown below: Bend one time only. Secure the obtuse side of the back plate onto the header with all the specified nails, ensuring the face of the back plate is tight against the header.

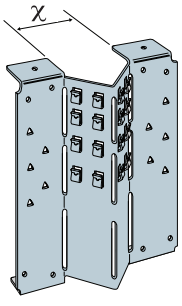

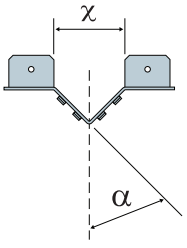

Step 3:
Offer the stirrup to the back plate ensuring it is located on the correct side (which can be either left or right hand side).

Once all of the hooks (on the back plate) are clearly through the apertures (on the stirrup) slide in a downward direction ensuring all hooks engage onto the stirrup and click into position. Locate the floor joist into the stirrup ensuring the joist is set tight to the back. The joist should be secured with all specified nails on the open face of the stirrup.

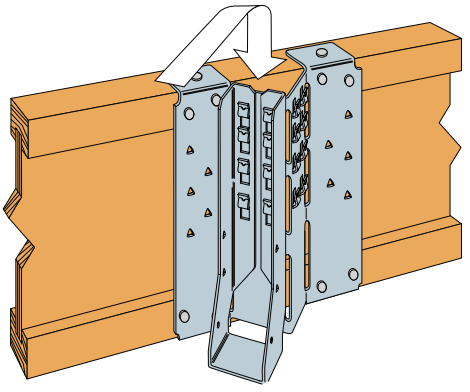

C-C-UK-2023 ©2023 SIMPSON STRONG-TIE COMPANY INC.

HIUB Metal Web Joist Hangers

The HIUB hanger supports metal web joists and solid timber joists without the need for plywood gussets.

- Can be used on metal web joists or solid joist headers.
- Eliminates the need for plywood gussets when supported from a metal web joist.

Material: Pre-galvanised mild steel.

STN RECOMMENDED FIXINGS

Product Dimensions

References	Joist Size [mm]		Hanger Dimensions [mm]							Header Holes	Joist Holes	
	Width	Height	A	B	C	D	E	F	t	Ø4.1	Ø4.1	Ø6 x 4 Oround
HIUB195/75	72	195	75	195	63	64	64	66	2	16	6	2
HIUB200/75	72	202	75	202	63	64	64	66	2	16	6	2
HIUB220/75	72	219	75	219	63	64	64	66	2	16	6	2
HIUB225/75	72	225	75	225	63	64	64	66	2	16	6	2
HIUB253/75	72	253 | 254	75	254	63	64	64	66	2	16	6	2
HIUB304/75	72	304	75	304	63	64	64	66	2	16	6	2
HIUB373/75	72	373	75	373	63	64	64	66	2	16	6	2
HIUB417/75	72	417 | 418	75	418	63	64	64	66	2	16	6	2
HIUB421/75	72	421	75	421	63	64	64	66	2	16	6	2
HIUB195/99	97	195	99	195	63	64	64	66	2	16	6	2
HIUB200/99	97	202	99	202	63	64	64	66	2	16	6	2
HIUB220/99	97	219	99	219	63	64	64	66	2	16	6	2
HIUB225/99	97	225	99	225	63	64	64	66	2	16	6	2
HIUB253/99	97	253 | 254	99	254	63	64	64	66	2	16	6	2
HIUB304/99	97	304	99	304	63	64	64	66	2	16	6	2
HIUB373/99	97	373	99	373	63	64	64	66	2	16	6	2
HIUB417/99	97	417 | 418	99	418	63	64	64	66	2	16	6	2
HIUB421/99	97	421	99	421	63	64	64	66	2	16	6	2
HIUB195/125	122	195	125	195	63	64	64	66	2	16	6	2
HIUB200/125	122	202	125	202	63	64	64	66	2	16	6	2
HIUB220/125	122	219	125	219	63	64	64	66	2	16	6	2
HIUB225/125	122	225	125	225	63	64	64	66	2	16	6	2
HIUB253/125	122	253 | 254	125	254	63	64	64	66	2	16	6	2
HIUB304/125	122	304	125	304	63	64	64	66	2	16	6	2
HIUB373/125	122	373	125	373	63	64	64	66	2	16	6	2
HIUB417/125	122	417 | 418	125	418	63	64	64	66	2	16	6	2
HIUB421/125	122	421	125	421	63	64	64	66	2	16	6	2
HIUB195/146	2x72	195	146	195	63	64	64	66	2	16	6	2
HIUB200/146	2x72	202	146	202	63	64	64	66	2	16	6	2
HIUB220/146	2x72	219	146	219	63	64	64	66	2	16	6	2
HIUB225/146	2x72	225	146	225	63	64	64	66	2	16	6	2
HIUB253/146	2x72	253 | 254	146	254	63	64	64	66	2	16	6	2
HIUB304/146	2x72	304	146	304	63	64	64	66	2	16	6	2
HIUB373/146	2x72	373	146	373	63	64	64	66	2	16	6	2
HIUB417/146	2x72	417 | 418	146	418	63	64	64	66	2	16	6	2

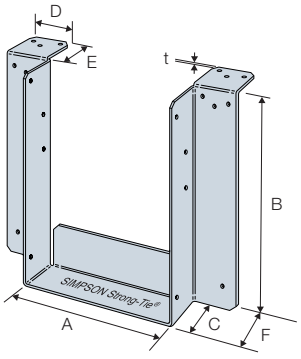

C-C-UK-2023 ©2023 SIMPSON STRONG-TIE COMPANY INC.

HIUB Metal Web Joist Hangers

SIMPSON Strong-Tie

Product Dimensions

References	Joist Size [mm]		Hanger Dimensions [mm]							Header Holes	Joist Holes	
	Width	Height	A	B	C	D	E	F	t	Ø4.1	Ø4.1	Ø6 x 4 Obround
HIUB421/146	2x72	421	146	421	63	64	64	66	2	16	6	2
HIUB195/150	147	195	150	195	63	64	64	66	2	16	6	2
HIUB200/150	147	202	150	202	63	64	64	66	2	16	6	2
HIUB220/150	147	219	150	219	63	64	64	66	2	16	6	2
HIUB225/150	147	225	150	225	63	64	64	66	2	16	6	2
HIUB253/150	147	253 I 254	150	254	63	64	64	66	2	16	6	2
HIUB304/150	147	304	150	304	63	64	64	66	2	16	6	2
HIUB373/150	147	373	150	373	63	64	64	66	2	16	6	2
HIUB417/150	147	417 I 418	150	418	63	64	64	66	2	16	6	2
HIUB421/150	147	421	150	421	63	64	64	66	2	16	6	2
HIUB195/196	2x97	195	196	195	63	64	64	66	2	16	6	2
HIUB200/196	2x97	202	196	202	63	64	64	66	2	16	6	2
HIUB220/196	2x97	219	196	219	63	64	64	66	2	16	6	2
HIUB225/196	2x97	225	196	225	63	64	64	66	2	16	6	2
HIUB253/196	2x97	253 I 254	196	254	63	64	64	66	2	16	6	2
HIUB304/196	2x97	304	196	304	63	64	64	66	2	16	6	2
HIUB373/196	2x97	373	196	373	63	64	64	66	2	16	6	2
HIUB417/196	2x97	417 I 418	196	418	63	64	64	66	2	16	6	2
HIUB421/196	2x97	421	196	421	63	64	64	66	2	16	6	2
HIUB195/246	2x122	195	246	195	63	64	64	66	2	16	6	2
HIUB200/246	2x122	202	246	202	63	64	64	66	2	16	6	2
HIUB220/246	2x122	219	246	219	63	64	64	66	2	16	6	2
HIUB225/246	2x122	225	246	225	63	64	64	66	2	16	6	2
HIUB253/246	2x122	253 I 254	246	254	63	64	64	66	2	16	6	2
HIUB304/246	2x122	304	246	304	63	64	64	66	2	16	6	2
HIUB373/246	2x122	373	246	373	63	64	64	66	2	16	6	2
HIUB417/246	2x122	417 I 418	246	418	63	64	64	66	2	16	6	2
HIUB421/246	2x122	421	246	421	63	64	64	66	2	16	6	2
HIUB195/296	2x147	195	296	195	63	64	64	66	2	16	6	2
HIUB200/296	2x147	202	296	202	63	64	64	66	2	16	6	2
HIUB220/296	2x147	219	296	219	63	64	64	66	2	16	6	2
HIUB225/296	2x147	225	296	225	63	64	64	66	2	16	6	2
HIUB253/296	2x147	235 I 254	296	254	63	64	64	66	2	16	6	2
HIUB304/296	2x147	304	296	304	63	64	64	66	2	16	6	2
HIUB373/296	2x147	373	296	373	63	64	64	66	2	16	6	2

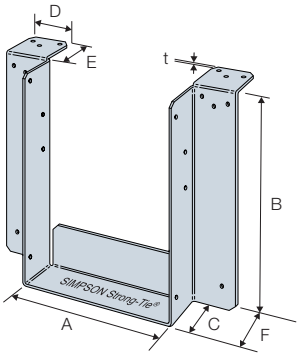

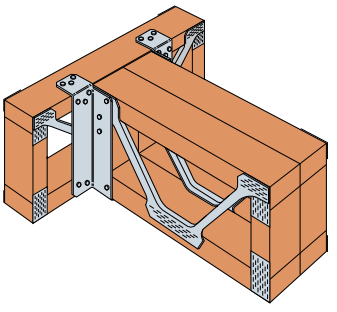

Standard HIUB Installation

Performance Values

Reference	Hanger Height [mm]	Fasteners						Safe Working Loads [kN]		Characteristic Capacities [kN]	
		Header				Joist					
		Top Qty	Type	Face Qty	Type	Qty	Type	$R_{1,SWL,Long\ term}$	$R_{2,SWL,\ Short\ Term}$	$R_{1,K}$	$R_{2,K}$
HIUB	Standard	6	N3.75 x 30	10	N3.75 x 30	8	N3.75 x 30	8.1	3.5	19.2	7.0
	Enhanced	6	N3.75 x 30	10	N3.75 x 30	8	N3.75 x 30	10.8	3.5	23.4	7.0

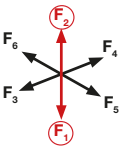

HIUB enhanced installation requires a timber blocking piece to be installed between the top and bottom flanges of the metal web joist.

C-C-UK-2023 ©2023 SIMPSON STRONG-TIE COMPANY INC.

IUBS Backer Free, Metal Web Joist Hanger with Adjustable Skew

The IUBS solves the problem of skewed hangers for metal web to metal web connections. It can be handed left or right on site, by the carpenter, removing confusion when the floor is built opposite to the drawing.
The IUBS is fully adjustable from 5° to 67.5° degrees skew, reducing the need for "special" skew hangers.

- Standard 45° skew, with site adjustable skew from 5° to 67.5° degrees.
- Non-handed hanger, can be left or right skewed - adjusted on site removing any handing confusion and reduce stocking.
- Use SSH screws for enhanced download capacity.
- Can be used on metal web joist or solid joist headers.
- Optional nail holes for additional download.

Material: Pre-galvanised mild steel.

SSH RECOMMENDED FIXINGS

STN RECOMMENDED FIXINGS

Product Dimensions

References	Joist Size [mm]		Hanger Dimensions [mm]					Header Holes			Joist Holes	
	Width	Height	A	B	C	D	t	Ø4.1	Triangular	Ø6.4	Ø6 x 4	Triangular
IUBS195/75	75	195	75	190	64	56	1.5	10	6	4	2	4
IUBS200/75	75	200	75	195	64	56	1.5	10	6	4	2	4
IUBS220/75	75	220	75	215	64	56	1.5	10	6	4	2	4
IUBS225/75	75	225	75	220	64	56	1.5	10	6	4	2	4
IUBS253/75	75	253	75	248	64	56	1.5	10	6	4	2	4
IUBS304/75	75	304	75	299	64	56	1.5	10	6	4	2	4
IUBS195/99	99	195	99	190	64	56	1.5	10	6	4	2	4
IUBS200/99	99	200	99	195	64	56	1.5	10	6	4	2	4
IUBS220/99	99	220	99	215	64	56	1.5	10	6	4	2	4
IUBS225/99	99	225	99	220	64	56	1.5	10	6	4	2	4
IUBS253/99	99	253	99	248	64	56	1.5	10	6	4	2	4
IUBS304/99	99	304	99	299	64	56	1.5	10	6	4	2	4

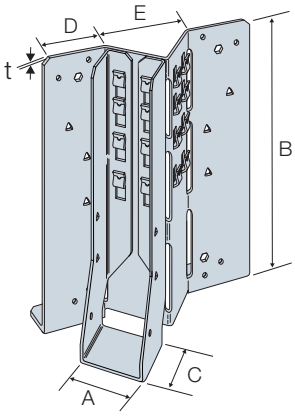

Performance Values

References	Fasteners				Safe Working Loads [kN]		Characteristic Capacities [kN]	
	Header		Joist					
	Qty	Type	Qty	Type	$R_{1,SWL,Long\ term}$	$R_{2,SWL,Short\ Term}$	$R_{1,K}$	$R_{2,K}$
IUBS	10	N3.75 x 30	2	N3.75 x 30	5.3	0.7	12.7	1.30
	4	SSH6.0X60	2	N3.75 x 30	7.2	0.7	17.2	1.30

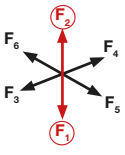

Angle Guide

100mm Backplate	
Skew Angle (α)	Distance [mm] (χ)
5°	206
15^0	200
22.5^0	190
30^0	180
37.5^0	166
45^0	149
52.5^0	130
60^0	109
67.5^0	86

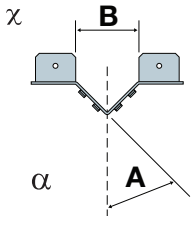

C-C-UK-2023 ©2023 SIMPSON STRONG-TIE COMPANY INC.

IUBS Backer Free, Metal Web Joist Hanger with Adjustable Skew

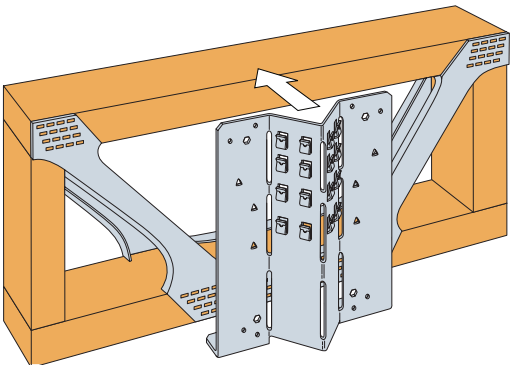

Step 1:
Position the back plate onto the header in the required position. Secure the back plate (inside angle) with the specified fasteners.

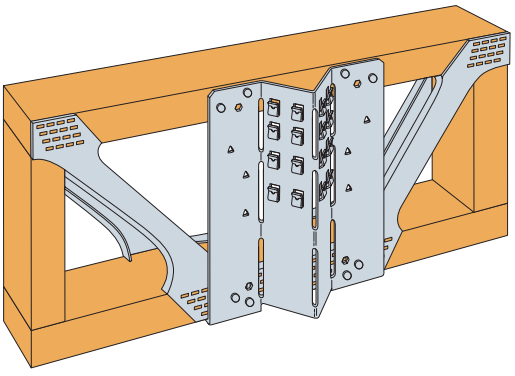

Step 2:
Adjust the angle of the back plate (if different from 45 degrees) to suit the required angle. Bend one time only. Secure the obtuse side of the back plate onto the header with all specified fasteners, ensuring the face of the back plate is tight against the header.

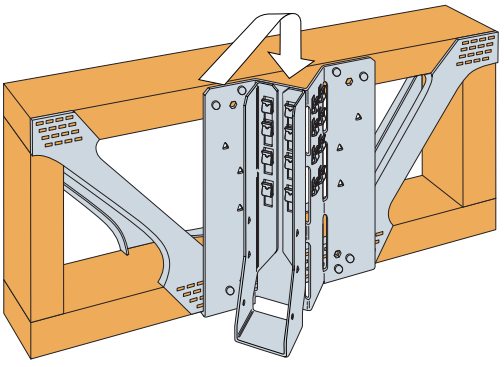

Step 3:
Offer the stirrup to the back plate ensuring it is located on the correct side (which can be either left or right hand side). Once all of the hooks (on the back plate) are clearly through the apertures (on stirrup) slide in a downward direction ensuring all hooks engage onto the stirrup and click into position.

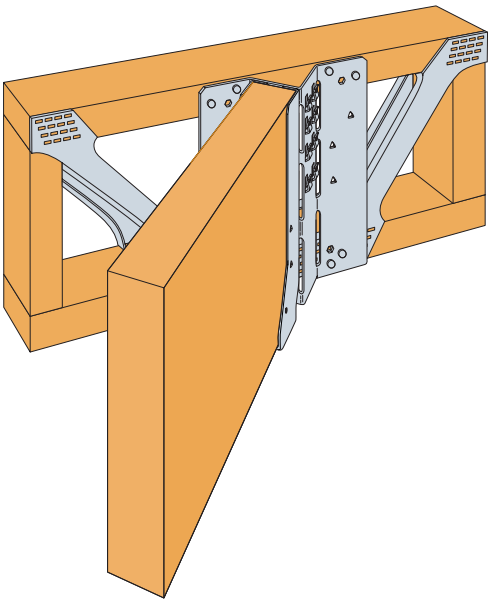

Step 4:
Locate the floor joist into the stirrup ensuring the joist is set to the back of it. The joist should be secured with all specified nails on the open face of the stirrup.

NOTE: For enhanced download capacity use SSH screws.

C-C-UK-2023 ©2023 SIMPSON STRONG-TIE COMPANY INC.

HB Top Flange Engineered Joist Hanger

The HB is a joist hanger for supporting I-Joists and structural composite timber from timber headers. The HB is designed especially for use with single ply headers of thickness 89mm or more.

Material: Pre-galvanised mild steel.

Installation:

- Use all specified fasteners. Verify that the header can take the required fasteners specified in the table.
- Web stiffeners are required for use with the HB hanger.
- The HB hanger may be used for weld on applications. The minimum required weld for the top flanges is a 3.0x50mm fillet weld on each side of the top flange tabs.
- Weld-on applications produce maximum allowable loads listed.
- Uplift loads do not apply for this application.
- Special considerations should be taken when welding galvanised steel.

Options: HB hangers can be skewed or sloped to a maximum of 45 degress.

RWN RECOMMENDED FIXINGS

STN RECOMMENDED FIXINGS

Product Dimensions

References	Hanger Dimensions [mm]							Header Holes	Joist Holes
	A	B	C	D	E	F	t	Ø4.3	Ø4.3
HBX	92 - 184	195 - 400	90	90	75	93	3	22	10

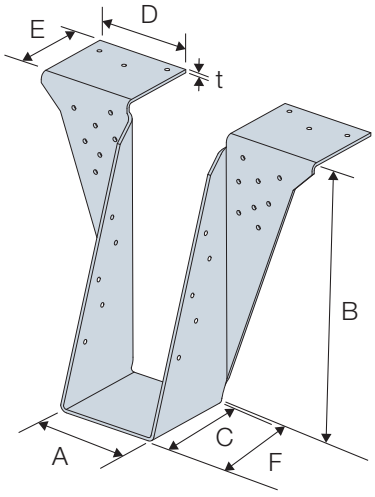

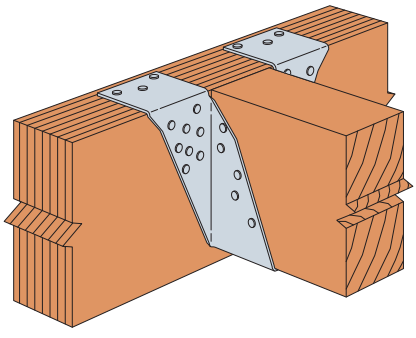

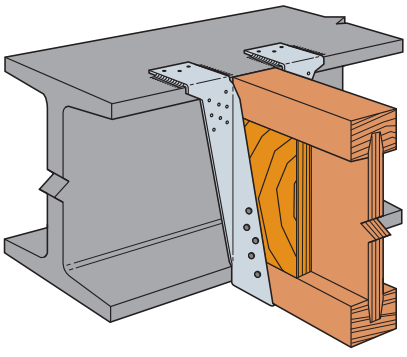

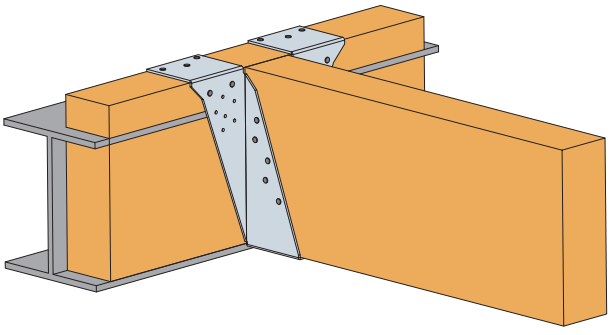

C-C-UK-2023 ©2023 SIMPSON STRONG-TIE COMPANY INC.

HB Top Flange Engineered Joist Hanger

Performance Values onto I-Joists

References	Installation	Number of Fasteners						Safe Working Loads [kN]			Characteristic Capacities [kN]		
		Header				Joist		$R_{1,SWL,Long\ term}$		$R_{2,SWL,\ Short\ Term}$	$R_{1,K}$		$R_{2,K}$
		Top Qty	Type	Face Qty	Type	Qty	Type	I-Joist Headers with LVL Flanges ≥35mm	I-Joist Headers with Solid Sawn Flanges ≥ 45mm		I-Joist Headers with LVL Flanges ≥ 35mm	I-Joist Headers with Solid Sawn Flanges ≥ 45mm	
HB	Backer Blocks	6	N3.75x30	16	N3.75x30	10	N3.75x30	12.9	13.6	5.0	30.2	30.2	8.8

Performance Values onto Solid Joists

References	Number of Fasteners						Safe Working Loads [kN]			Characteristic Capacities [kN]		
	Header				Joist		$R_{1,SWL,Long\ term}$		$R_{2,SWL,\ Short\ Term}$	$R_{1,K}$		$R_{2,K}$
	Top Qty	Type	Face Qty	Type	Qty	Type	C16	LVL		C16	LVL	
HB	6	N3.75x75	16	N3.75x75	10	N3.75x75	16.9	26.4	6.9	40.7	40.7	13.1

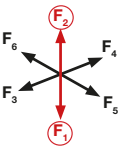

Performance Values onto Timber Nailers

References	Nailer Depth [mm]	Number of Fasteners						Safe Working Loads [kN]		Characteristic Capacities [kN]	
		Header				Joist		$R_{1,SWL,Long\ term}$	$R_{2,SWL,\ Short\ Term}$	$R_{1,K}$	$R_{2,K}$
		Top Qty	Type	Face Qty	Type	Qty	Type				
HB	38-74	6	N3.75x30	4	N3.75x30	10	N3.75x30	8.4	1.8	20.2	3.5
HB	75-100	6	N3.75x75	12	N3.75x75	10	N3.75x75	14.6	4.4	35.1	8.8

Product Values Skew & Slope Adjustment Factors

References	Sloped Down	Sloped up	Skewed	Sloped Down & Skewed	Sloped Up & Skewed
HB	0.9	0.7	0.96	0.59	0.7

How to specify the required hanger reference. Example: IUSE to suit an I-Joist with height 200mm and width 53mm = IUSE199/56. Search IUSE at www.strongtie.co.uk for a full list of items.

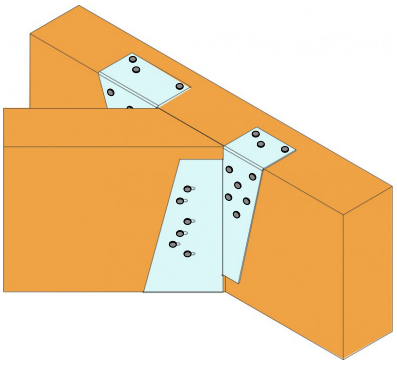

HB Skewed Left Installation.

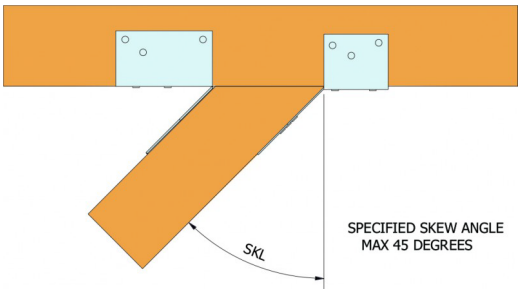

HB Skewed Left Option.

C-C-UK-2023 ©2023 SIMPSON STRONG-TIE COMPANY INC.

ZS Slotted Z-Clip

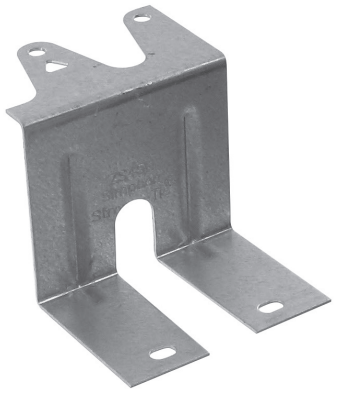

The ZS clip allows I-Joist off-cuts or solid sawn timber to be used as noggings between joists to support floor decks or partitions.

- Fully interlocking top flange works on all I-Joist header widths to prevent overlapping of opposing clips.
- Slotted bottom flanges allows I-Joist off-cuts to be used.
- Triangular nail hole for use with 50mm wide headers, also it ensures that nails can be staggered when ZS clips are interlocked.
- Embossed bottom flange provides greatly enhanced resistance to bending.
- Obround nail holes in the bottom flange ensure easier angled nailing.

Material: Pre-galvanised mild steel.

Installation:

- Use all specified fasteners.
- Nail to underside of the nogging.
- Place top flange onto header beam and nail in place.

STN RECOMMENDED FIXINGS

Product Dimensions

References	Dimensions [mm]					Header Holes		Joist Holes
	A	B	C	E	t	Ø4	Triangular	Ø6x4 Obround
ZS35N	52	35	49	31	0.9	2	1	2
ZS38N	52	38	46	31	0.9	2	1	2
ZS45N	52	45	39	31	0.9	2	1	2
ZS47N	52	47	37	31	0.9	2	1	2

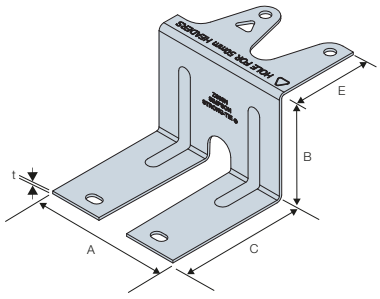

Performance Values

References	Fasteners		Safe Working Loads		Characteristic Capacities [kN]	
	Header	Joist	$R_{1,SWL,Long\ Term}$		$R_{1,K}$	
			N3.75x30		N3.75x30	
	Qty	Qty	C24	I-Joist	C24	I-Joist
ZS	2	2	1.8	1.9	3.6	3.8

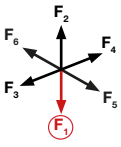

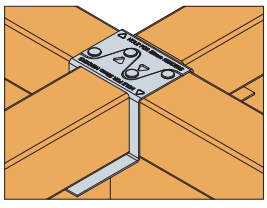

Notes: Loads are per nogging (NOT per ZS-Clip).

Standard ZS Installation

ZS clips interlock allowing back-to-back installation on any I-Joist header width. Triangular holes prevent header nails from lining up.

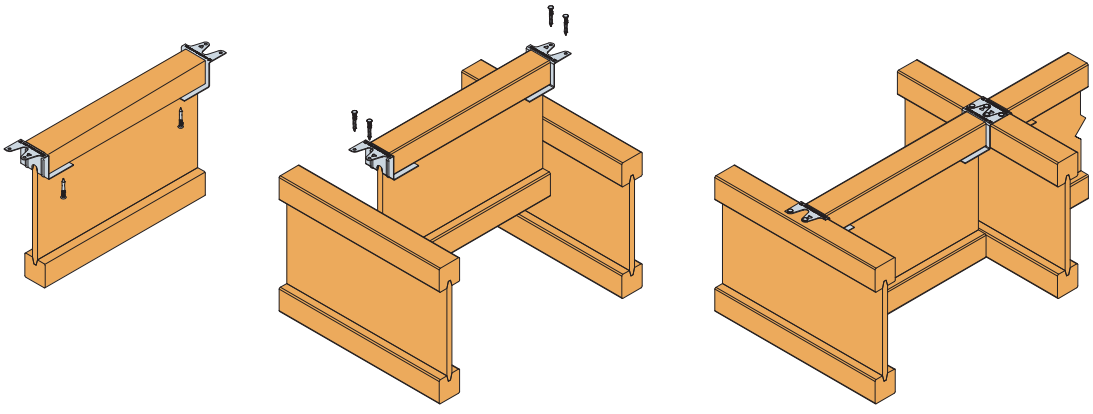

C-C-UK-2023 ©2023 SIMPSON STRONG-TIE COMPANY INC.

IHS I-Joist Hole Support

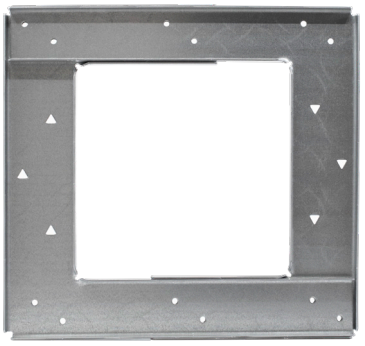

The IHS is designed to strengthen I-Joists when holes are required to be cut in locations not normally permitted. As the IHS consists of two separate parts it is able to be retro fitted if pipes or ducting has already been installed in the floor zone.

- Allows holes to be cut 50mm from bearing point, which allows services to run close to external walls.
- Variable hole sizes from 150mm to a maximum width of 250mm.
- Supplied as 2 sets of 2 interlocking plates (1 set per side of I-Joist) which always allows the IHS to be fitted, even when services are already in-situ.
- Helps to eliminate expensive and time consuming joist trimming for SVP (soil vent pipe) runs.
- Can be used on single and double ply I-Joists.

Material: Pre-galvanised mild steel.

STN RECOMMENDED FIXINGS

Product Dimensions

References	Joist [mm]	Dimensions [mm]						Connector Holes / Plate	
		A	B	C	D_1	D_2	t	Ø4	Tri
IHS195	195 - 200	150	250	191	150	250	1.5	10	3
IHS220	220 - 225	150	250	216	150	250	1.5	10	3
IHS235	235	150	250	231	150	250	1.5	10	3
IHS240	240 - 245	150	250	236	150	250	1.5	10	3
IHS300	300 - 302	150	250	296	150	250	1.5	10	3

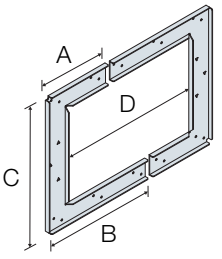

Fasteners		
Bracket Opening		Type
150mm	250mm	
24	32	N3.75x30mm

IHS Installation:

- Each IHS consists of 2 sets of 2 interlocking plates with 1 set required for each side of the I-Joist.
- The outer edge of the holes cut into the web of the I-Joist can be a minimum of 50mm from the inner face of the blockwork.
- Holes can be cut into the web of the I-Joist before or after installation of the IHS.
- Holes must fit within the internal aperture of the IHS.
- Place the IHS onto the I-Joist so that the top and bottom sliding flanges are aligned vertically central onto the top and bottom chords of the I-Joist.
- Open or close the IHS to the required width, ensuring that the two sections overlap by at least one row of nails (minimum overlap of 45mm).
- Install 3.75x30mm square twist nails through all round holes into the top and bottom chords of the I-Joist.
- Repeat the above steps to install plates on the other side of the I-Joist, completing the installation.

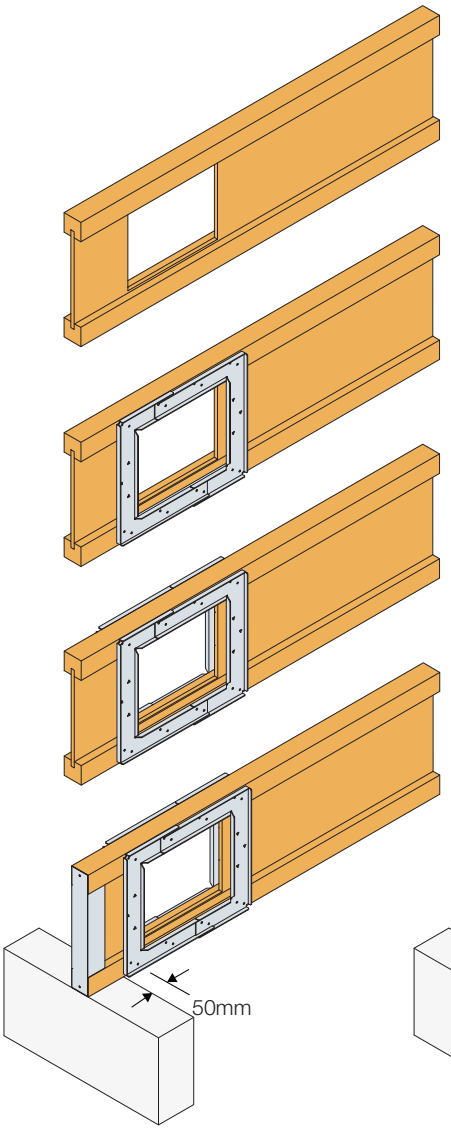

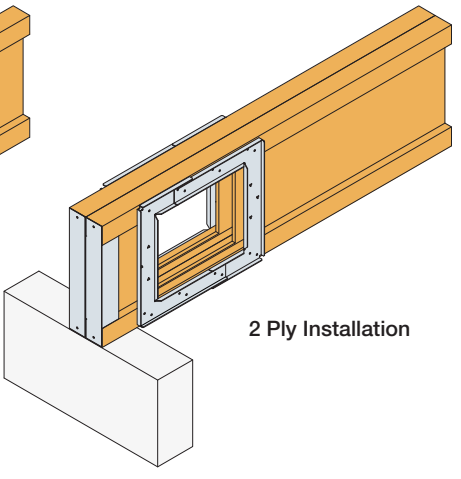

2 Ply Installation

C-C-UK-2023 ©2023 SIMPSON STRONG-TIE COMPANY INC.

IHS I-Joist Hole Support

SIMPSON Strong-Tie

Performance Values

I-Joist Manufacturer	Joist Width [mm]	Joist Height [mm]	References	Maximum allowable hole size with IHS [mm]	Maximum shear capacity at location of IHS [kN] (VHole)			
					Characteristic Capacity		Safe Working Load	
					Single Ply	Double Ply	Single Ply	Double Ply
James Jones	47	195	IHS195	100 x 250	6.4	8.5	2.6	3.5
		220	IHS220	120 x 250	6.8	9.1	2.8	3.7
		235	IHS235	140 x 250	7.1	9.4	2.9	3.9
		245	IHS240	150 x 250	7.2	9.7	3.0	4.0
		300	IHS300	200 x 250	8.3	11.1	3.4	4.5
	63	220	IHS220	120 x 250	7.5	10.0	3.1	4.1
		235	IHS235	140 x 250	7.7	10.3	3.2	4.2
		245	IHS240	150 x 250	7.9	10.6	3.2	4.3
		300	IHS300	200 x 250	8.9	11.9	3.7	4.9
	72	195	IHS195	100 x 250	7.5	10.0	3.1	4.1
		220	IHS220	120 x 250	7.9	10.5	3.2	4.3
		235	IHS235	140 x 250	8.1	10.8	3.3	4.4
		245	IHS240	150 x 250	8.3	11.0	3.4	4.5
		300	IHS300	200 x 250	9.3	12.4	3.8	5.1
	97	220	IHS220	120 x 250	8.8	11.8	3.6	4.8
		235	IHS235	140 x 250	9.1	12.1	3.7	5.0
		245	IHS240	150 x 250	9.2	12.3	3.8	5.1
		300	IHS300	200 x 250	10.2	13.7	4.2	5.6
Masonite	47	220	IHS220	120 x 250	7.6	9.1	2.3	2.7
		240	IHS240	140 x 250	8.2	9.9	2.5	2.9
		300	IHS300	200 x 250	10.3	12.3	3.1	3.7
	60	220	IHS220	120 x 250	7.6	9.1	2.3	2.7
		240	IHS240	140 x 250	8.2	9.9	2.5	2.9
		300	IHS300	200 x 250	10.3	12.3	3.1	3.7
	70	220	IHS220	120 x 250	7.6	9.1	2.3	2.7
		240	IHS240	140 x 250	8.2	9.9	2.5	2.9
		300	IHS300	200 x 250	10.3	12.3	3.1	3.7
	97	220	IHS220	120 x 250	7.6	9.1	2.3	2.7
		240	IHS240	140 x 250	8.2	9.9	2.5	2.9
		300	IHS300	200 x 250	10.3	12.3	3.1	3.7
MetsaWood	45	200	IHS195	100 x 250	5.5	6.5	2.3	2.7
		220	IHS220	125 x 250	6.4	7.5	2.7	3.1
		240	IHS240	145 x 250	7.2	8.3	3.0	3.5
		300	IHS300	200 x 250	8.6	10.0	3.6	4.2
	53	200	IHS195	100 x 250	5.8	6.7	2.4	2.8
		220	IHS220	125 x 250	6.7	7.8	2.8	3.2
		240	IHS240	145 x 250	7.4	8.7	3.1	3.6
		300	IHS300	200 x 250	8.9	10.4	3.7	4.3
	69	200	IHS195	100 x 250	6.0	7.0	2.5	2.9
		220	IHS220	125 x 250	6.7	7.8	2.8	3.3
		240	IHS240	145 x 250	7.4	8.7	3.1	3.6
		300	IHS300	200 x 250	9.5	11.0	3.9	4.6
	96	200	IHS195	100 x 250	5.9	6.9	2.5	2.9
		220	IHS220	125 x 250	6.7	7.8	2.8	3.3
		240	IHS240	145 x 250	7.7	9.0	3.2	3.8
		300	IHS300	200 x 250	9.3	10.9	3.9	4.5
Steico	45	200	IHS195	100 x 250	6.0	8.4	2.4	3.3
		220	IHS220	130 x 250	6.5	9.1	2.6	3.6
		240	IHS240	150 x 250	7.0	9.8	2.8	3.9
		300	IHS300	200 x 250	8.1	11.3	3.2	4.5
	60	200	IHS195	100 x 250	6.3	8.8	2.5	3.5
		220	IHS220	130 x 250	6.9	9.6	2.7	3.8
		240	IHS240	150 x 250	7.4	10.4	2.9	4.1
		300	IHS300	200 x 250	8.5	11.9	3.3	4.7
	90	200	IHS195	100 x 250	6.8	9.6	2.7	3.8
		220	IHS220	130 x 250	7.4	10.4	2.9	4.1
		240	IHS240	150 x 250	8.0	11.2	3.2	4.4
		300	IHS300	200 x 250	9.1	12.7	3.6	5.0

C-C-UK-2023 ©2023 SIMPSON STRONG-TIE COMPANY INC.

MJC Multiple Joist Connector

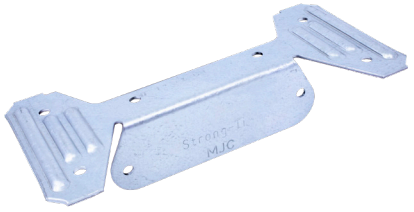

The multi joist connector (MJC) allows two I-Joists/metal web joists to be fixed together to act as a single unit, transferring the incoming load from the loaded ply to the unloaded ply. The MJC is an improved solution to the traditional filler block detail, which historically has been time consuming to fit and difficult to check if fitted correctly. Its simple and effective design allows one size of product to be used on any joist size – regardless of height or width.

- Quick and simple to install.
- Safely joins multiple joists together, allowing them to act as a single unit.
- Easy to see that MJCs are installed (where as filler blocks are not visible).
- One size product fits all joist height and width combinations.

Material: Pre-galvanised mild steel.

STN RECOMMENDED FIXINGS

Product Dimensions

References	Dimensions [mm]				Top Holes	Face Holes
	A	B	C	t	Ø4.1	Ø4.1
MJC	133	29	65	1.2	6	2

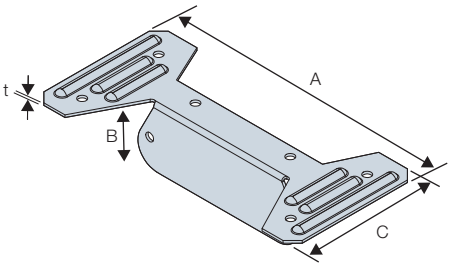

Installation with Metal Web Joists

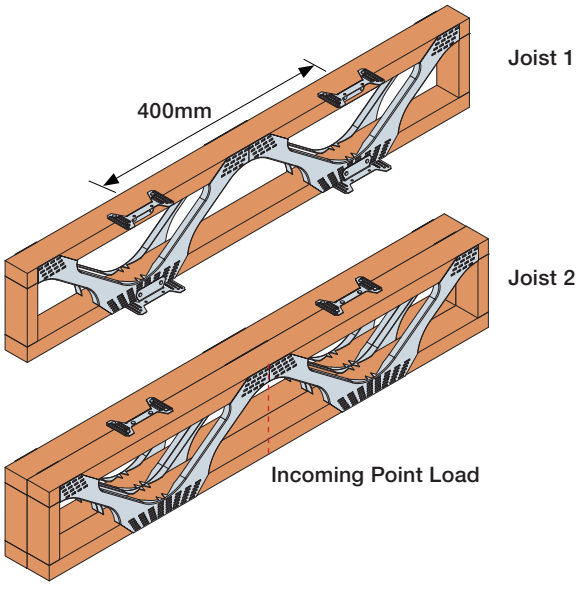

Installation with I-Joists

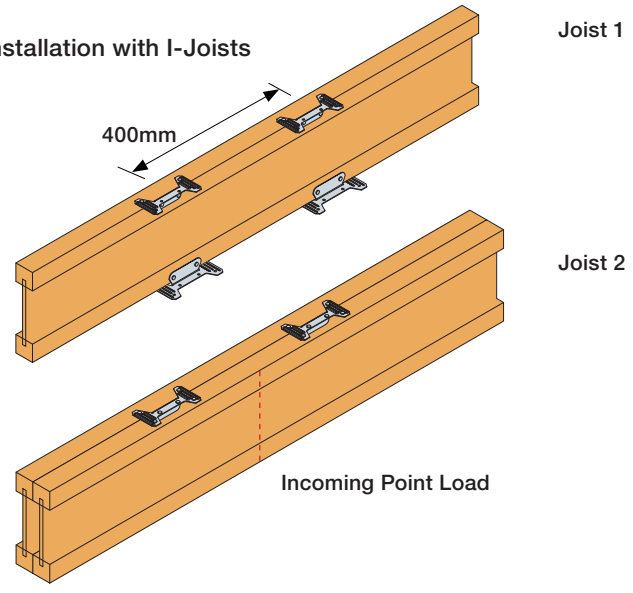

Step 1

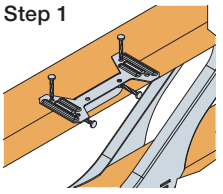

Step 2

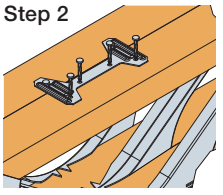

Step 1

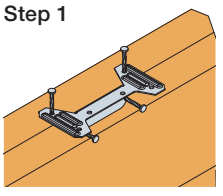

Step 2

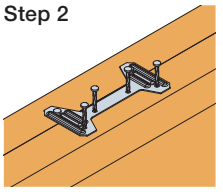

Installation Guide

Step 1:
Position the MJCs onto the first joist - ensuring that they are centred about the incoming load at 400 c/c (may be adjusted within 10mm each way).

Step 2:
Secure each MJC with 4 No 3.75 x 30mm Square Twist Nails, 2 no. fasteners into the joists top face (or for the lower flange MJC, the joists bottom face) and 2 no. fasteners into the joists front face, as shown.

Step 3:
Position the second joist ensuring ends are flush and joists are parallel. Secure the joist to the MJC using 4 No 3.75 x 30mm Square Twist Nails per MJC into the top (or bottom flange) as shown.

C-C-UK-2023 ©2023 SIMPSON STRONG-TIE COMPANY INC.

MJC Multiple Joist Connector

Performance Values

Number of MJCs [2]	Fasteners per MJC: Joist 1 Qty N3.75x30	Fasteners per MJC: Joist 2 Qty N3.75x30	Safe Working Loads [kN] $R_{1,SWL,Long\ Term}$: I-Joist LVL Flanges	Safe Working Loads [kN] $R_{1,SWL,Long\ Term}$: I-Joists Solid Sawn Flanges	Safe Working Loads [kN] $R_{1,SWL,Long\ Term}$: Metal Web	Characteristic Load [kN] $R_{1,k}$: I-Joist LVL Flanges	Characteristic Load [kN] $R_{1,k}$: I-Joists Solid Sawn Flanges	Characteristic Load [kN] $R_{1,k}$: Metal Web
Maximum Incoming Concentrated Load [1]								
4	4	4	6.9	6.4	5.3	16.6	15.3	12.6
8	4	4	10.3	9.6	7.9	24.9	22.9	18.9
Maximum Incoming Regular Load [3]								
2	4	4	3.4	3.2	2.3	8.3	7.6	6.3
4	4	4	5.1	4.8	3.5	12.4	11.4	9.4

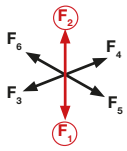

1. Maximum incoming Concentrated load refers to maximum concentrated load that can be applied when the MJCs are installed either side of the incoming load.
2. Number of MJCs equally spaced about the incoming load.
3. Maximum Incoming Regular load refers to the maximum load that can be applied at regular intervals along the supporting timber.

HGUS Heavy Engineered Timber Hanger

The HGUS joist hangers are designed to support trusses and girder trusses from timber members.

Installation:

- Double shear nailing allows distribution of the carried members load through two points on each nail for greater strength (see illustration).
- Joist nails must be driven at 45° through the joist dome, pan or obround nail holes, into the joist, then the header to achieve the table loads.
- The thickness of the supporting timber must be equal or greater than the fastener length.
- Verify the header can take the required fasteners specified below.
- Use all specified fasteners.

Material: Pre-galvanised mild steel.

Product Dimensions

References	Dimensions [mm] Width	Dimensions [mm] Min Height	Dimensions [mm] Max Height	Dimensions [mm] A	B	C	D	F	t	Header Holes Ø5	Header Holes Ø5 x 10mm Obrounds	Joist Holes Ø5 x 10mm Obrounds
HGUS48N	89	200	300	92	180	100	66	107	2.5	28	10	10
HGUS410N	89	240	450	92	229	100	66	107	2.5	36	10	16
HGUS412N	89	300	450	92	265	100	66	107	2.5	44	12	20
HGUS180/135N	133	200	300	135	180	100	66	107	2.5	28	8	10
HGUS5.50/10N	133	240	450	140	214	100	66	107	2.5	36	10	16
HGUS5.50/12N	133	300	450	140	265	100	66	107	2.5	44	12	20
HGUS5.50/14N	133	350	450	140	316	100	66	107	2.5	52	14	22
HGUS7.25/10N	180	240	450	184	219	100	66	107	2.5	36	10	16
HGUS7.25/12N	180	300	450	184	270	100	66	107	2.5	44	12	20
HGUS7.25/14N	180	350	450	184	320	100	66	107	2.5	52	14	22
SPEC E HGUSN	92 - 300	200	300	92 - 300	180	100	66	107	2.5	28	10	10

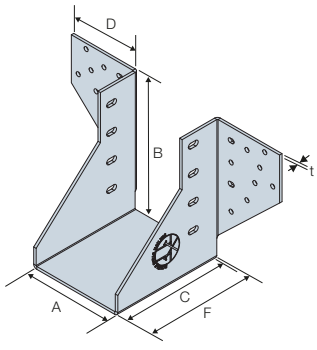

Performance Values

References	Fasteners: Header Qty	Fasteners: Joist Qty	Safe Working Loads [kN] $R_{1,SWL,Long\ Term}$ N4.0x100	Safe Working Loads [kN] $R_{2,SWL,Short\ Term}$ N4.0x100
HGUS48N	38	10	27.8	7.5
HGUS410N	46	16	35.9	9.7
HGUS412N	56	20	40.9	11.3
HGUS180/135N	36	10	27.8	7.5
HGUS5.50/10N	46	16	35.9	9.7
HGUS5.50/12N	56	20	40.9	11.3
HGUS5.50/14N	66	22	43.5	12.9
HGUS7.25/10N	46	16	35.9	9.7
HGUS7.25/12N	56	20	40.9	11.3
HGUS7.25/14N	66	22	43.5	12.9
SPEC E HGUSN	38	10	27.8	7.5
			18.3 (*)	7.5

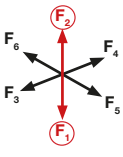

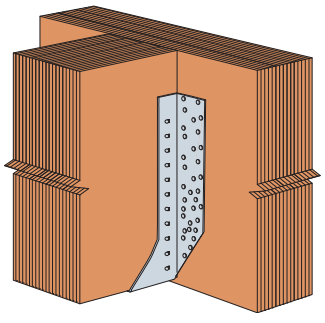

HGUS Typical Installation

(*) SPEC E HGUSN widths > 185mm
Stated performance values are based upon all round and obround holes being filled

C-C-UK-2023 ©2023 SIMPSON STRONG-TIE COMPANY INC.

TCP Truss Clip

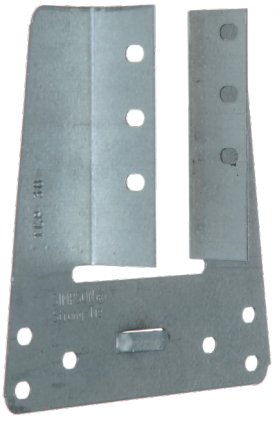

The TCP truss clip attaches trusses and rafters to wall plates to provide wind uplift restraint. TCP truss clips may be used for general purposes and as all-purpose ties wherever one timber member crosses another.

- Speed prong provides temporary attachment for ease of installation.
- Obround holes for easier nail driving.

Material: Pre-galvanised mild steel.

Installation: Use all specified fasteners.

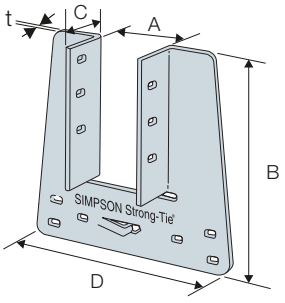

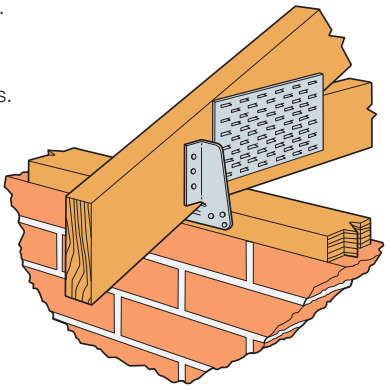

STN RECOMMENDED FIXINGS

Product Dimensions

References	Dimensions [mm]					Header Holes	Joist Holes
	A	B	C	D	t	Obround 4 x 6	Obround 4 x 6
TCP38	38	100	18	107	0.9	6	6
TCP47	47	100	23	107	0.9	6	6
TCP50	50	100	26	107	0.9	6	6

Performance Values

Fasteners		Safe Working Loads [kN]	Characteristic Capacities [kN]
Truss	Wall Plate		
Qty	Qty	$R_{2,SWL,Short\ Term}$	$R_{2,K}$
		N3.75x30	N3.75x30
6	6	2.1	3.3

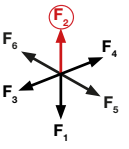

DTC/STC Slotted Truss/Joist Clips

NEW

STC & DTC truss clips are used to provide alignment control between a roof truss or joist and a non-load bearing wall. The 38mm slot permits vertical truss or joist chord movement when loads are applied.

Material: Galvanised Mild Steel: 275 g/m².

Installation:

- Use the specified number of fasteners. (see performance table for fastener type).
- Use a maximum of one fastener per slot.

RWN RECOMMENDED FIXINGS

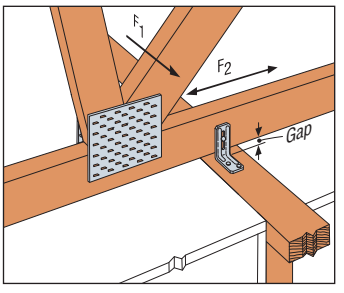

Product Dimensions

References	Dimensions [mm]				Holes	
					Flange A	Flange B
	A	B	C	t	Ø4.3x43 Slot	Ø4.3
STC	70	48	32	1.3	1	2
DTC	70	48	64	1.3	2	4

Performance Values - Truss to Timber Stud Wall

References	Fasteners		Safe Working Loads [kN]						Characteristic Capacities [kN]					
			Without Gap		6mm Maximum Gap		12mm Maximum Gap		Without Gap		6mm Maximum Gap		12mm Maximum Gap	
	Flange A (N3.35x65)	Flange B (N3.35x65)	$R_{1,ST\ SWL}$	$R_{2,ST\ SWL}$	$R_{1,ST\ SWL}$	$R_{2,ST\ SWL}$	$R_{1,ST\ SWL}$	$R_{2,ST\ SWL}$	$R_{1,K}$	$R_{2,K}$	$R_{1,K}$	$R_{2,K}$	$R_{1,K}$	$R_{2,K}$
STC	1	2	0.31	0.24	0.16	0.13	0.11	0.18	0.65	0.51	0.33	0.28	0.23	0.37
DTC	2	4	0.56	0.89	0.36	0.56	0.24	0.31	1.17	1.87	0.75	1.17	0.51	0.65

1) Truss or rafter must bear on top plate to achieve the allowable loads under "Without Gap."
2) Clips are required on both sides of the truss to achieve F_1 loads in both directions (stagger parts to avoid nail interferences).
3) Install slot nails in the middle of the slot. Nails should not be driven completely flush against the connector to allow for vertical truss movement.
4) Products not intended for floor applications due to the frequency of floor joist deflections and potential for squeaks.
5) Allow up to 1.5mm gap between nail head and truss clip to help prevent squeaking.

C-C-UK-2023 ©2023 SIMPSON STRONG-TIE COMPANY INC.

DTC/STC Slotted Truss/Joist Clips

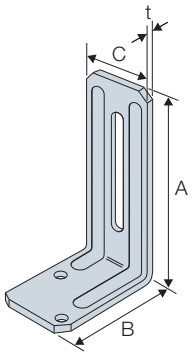

STC

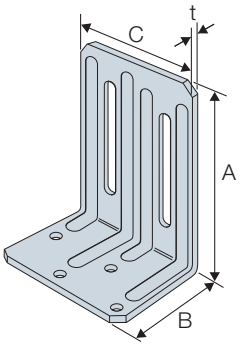

DTC

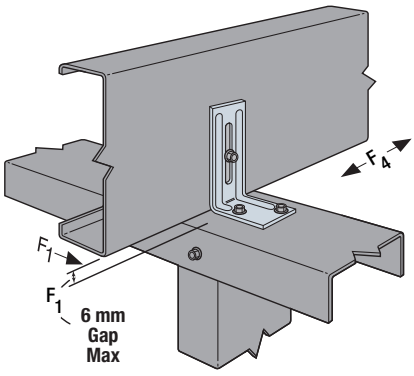

Typical STC Installation

To allow for vertical truss movement, screws into the truss or rafter should not be driven completely flush against the connector.

GS Glide Shoe

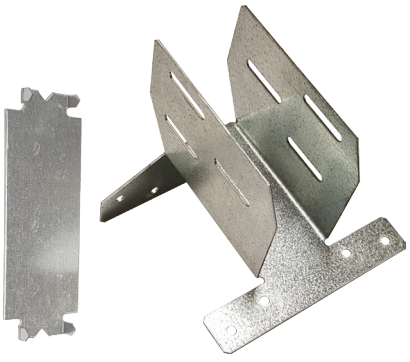

Glide shoes are specially designed to allow horizontal movement between raised tie trusses and wallplates.

The GS allows lateral movement of raised tie trusses up to 15mm during installation of roofing materials and resists uplift forces. Typically used on one or both ends of the truss as determined by the truss designer.

Material: Pre-galvanised mild steel.

STN RECOMMENDED FIXINGS

Product Dimensions

References	Dimensions [mm]							Header Holes	Joist Holes
	A	B	C	D	E	F	t	Ø4.1	4 x 25 Slots
GS38	38	97	88	102	40	62	1.2	10	6
GS50	50	97	88	114	40	62	1.2	10	6
GS75	75	97	88	139	40	62	1.2	10	6
GS100	100	97	88	164	40	62	1.2	10	6
GS150	150	97	88	214	40	62	1.2	10	6
GS200	200	97	88	264	40	62	1.2	10	6

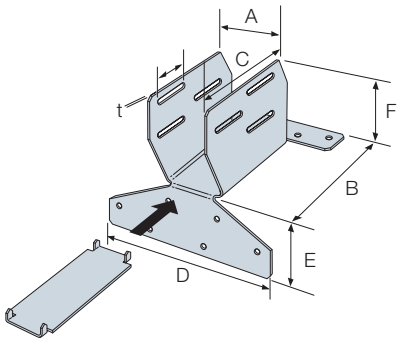

Performance Values

References	Fasteners		Safe Working Loads [kN]		Characteristic Capacities [kN]	
	Wall Plate	Joist				
	Qty	Qty	$R_{2,SWL,Short\ Term}$	$R_3=R_{4,SWL,Short\ Term}$	$R_{2,K}$	$R_3=R_{4,K}$
			N3.75x30	N3.75x30	N3.75x30	N3.75x30
GS	10	6	1.4	3.3	2.8	6.6

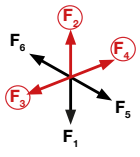

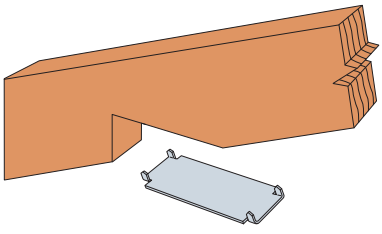

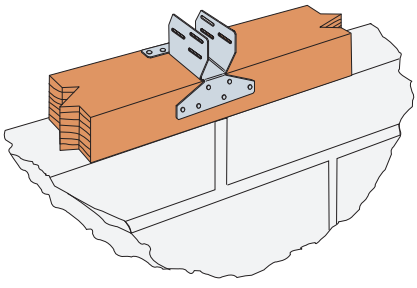

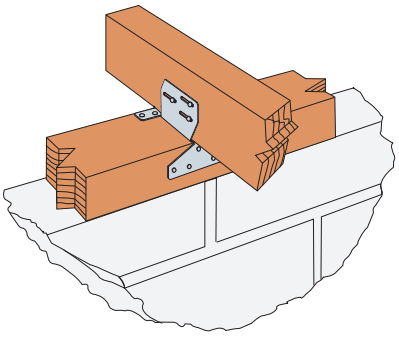

C-C-UK-2023 ©2023 SIMPSON STRONG-TIE COMPANY INC.

THM Mono Truss Hanger

The THM (Truss Hanger Mono) is a joist hanger for supporting mono trusses from timber members.

The THM hanger offers two installation options:

- Standard nailing.
- Enhanced nailing: double shear joist nails.

Features speed prongs for ease of installation.

Material: Pre-galvanised mild steel.

RWN RECOMMENDED FIXINGS

STN RECOMMENDED FIXINGS

Product Dimensions

References	Joist [mm]			Hanger Dimensions [mm]						Header Holes	Joist Holes
	Width	Height		A	B	C	D	F	t	Ø4.1	Obround Ø6x4
	Max	Min	Max								
THM230/38	38	97	147	38	96	75	42	77	0.9	10	6
THM230/44	44	97	147	44	93	75	42	77	0.9	10	6
THM230/47	47	97	147	47	92	75	42	77	0.9	10	6
THM230/50	50	97	147	50	90	75	42	77	0.9	10	6

Product Performance

References	Fasteners				Safe Working Loads [kN]		Characteristic Capacities [kN]
	Header		Joist				
	Qty	Type	Qty	Type	$R_{1,SWL,Long\ term}$	$R_{1,SWL,Medium\ term}$	$R_{1,K}$
THM	10	N3.75x30	6	N3.75x30	3.4	3.9	7.3
	10	N3.75x30	6	N3.75x75	4.4	5.1	9.8

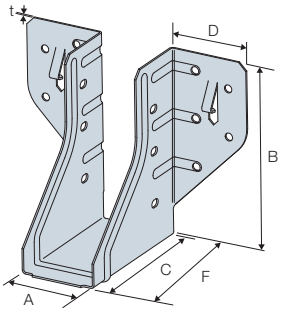

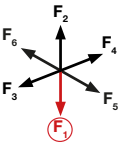

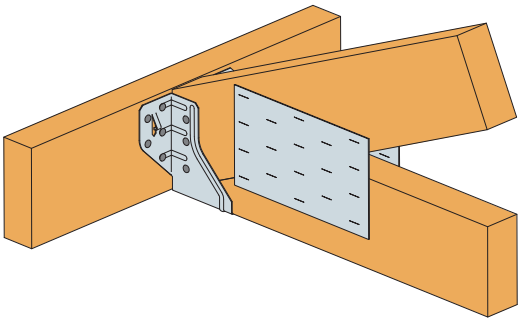

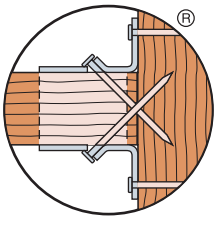

Double Shear Nailing

Unique double shear nailing feature guides the joist nails into the joist at a 45° angle. This provides easier nail driving as the installer doesn't need to swing the hammer sideways.

C-C-UK-2023 ©2023 SIMPSON STRONG-TIE COMPANY INC.

THA Truss Hanger with Adjustable Height Strap

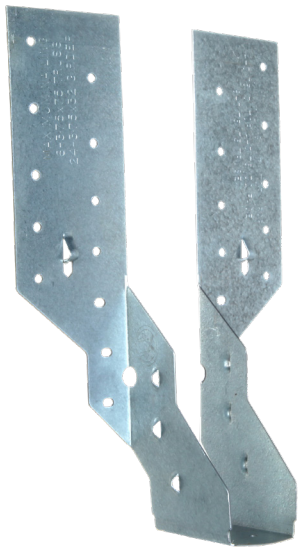

The THA is a one-piece joist hanger supporting trussed rafters and composite timbers from timber members.

The THA can be installed with a number of fixing options for greater load capacity. See table below for fixing options.

- Available in seat widths from 38mm to 100mm.
- Location tab allows easier alignment to the carrying member.
- Choice of installation specifications to suit wrap-over or face fix.
- Speed prongs enable positioning of the hanger without nails before completing the install.
- Nailing schedules are stamped into the strap to provide the correct information to site operatives.
- The distinctive wide strap enhances the performance of the critical part of the connection by increasing the nail spacing and providing greater bearing area on the supporting girder.

Material: Pre-galvanised mild steel.

RWN RECOMMENDED FIXINGS

STN RECOMMENDED FIXINGS

Product Dimensions

References	Dimensions [mm]							Header Holes		Joist Holes
	A	B	C	D	E	F	t	Ø4.1	Obround Ø6x4	Dome
THA38	38	226	63	60	114	65	1.2	22	4	6
THA44	44	223	63	60	111	65	1.2	22	4	6
THA50	50	220	63	60	108	65	1.2	22	4	6
THA75	75	233	63	60	120	65	1.2	22	4	6
THA100	100	220	63	60	108	65	1.2	22	4	6

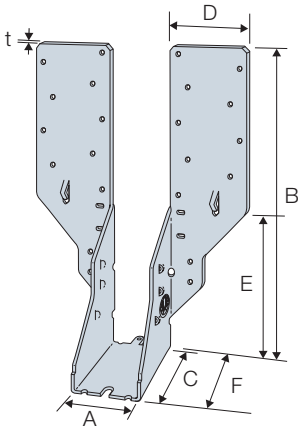

Performance Values

References	Installation	Header Member Depth [mm]	Fasteners						Safe Working Loads [kN] (TR26 Timber)			Characteristic Capacities [kN] (TR26 Timber)	
			Header Face		Header Top		Joist						
			Type	Qty	Type	Qty	Type	Qty	$R_{1,SWL,\ Long\ Term}$	$R_{1,SWL,Med\ Term}$	$R_{1,SWL,Short\ Term}$	$R_{1,k}$	$R_{2,k}$
THA	Face Fix	197 – 222	20	N3.75x30	-	-	6	N3.75x30	5.2	5.9	1.9	12.4	3.7
	Wrap Over	122 – 197	8	N3.75x30	4	N3.75x30	6	N3.75x30	4.4	5.0	1.9	10.5	3.7
	Face Fix	197 – 222	20	N3.75x30	-	-	6	N3.75x75	6.4	7.3	2.7	15.4	5.3
	Wrap Over	122 – 197	8	N3.75x30	4	N3.75x30	6	N3.75x75	6.8	7.8	2.7	16.4	5.3
	Face Fix	197 – 222	20	N3.75x75	-	-	6	N3.75x75	8.6	9.8	2.7	20.5	5.3
	Wrap Over	147 – 197	14	N3.75x75	4	N3.75x75	6	N3.75x75	8.6	9.8	2.7	20.5	5.3

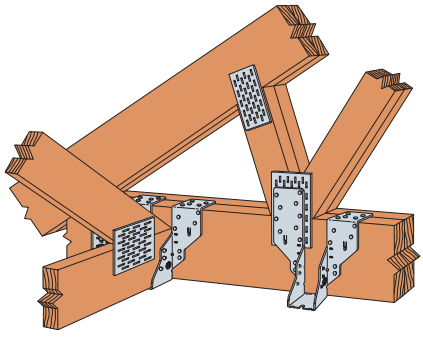

THA Typical Top Fix and Face Fix Installation

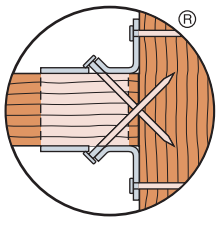

Double Shear Nailing

Unique double shear nailing feature guides the joist nails into the joist at a 45° angle. This provides easier nail driving as the installer doesn't need to swing the hammer sideways.

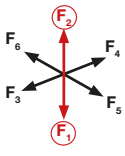

C-C-UK-2023 ©2023 SIMPSON STRONG-TIE COMPANY INC.

HGUS Heavy Engineered Truss Timber Hanger

The HGUS is a joist hanger designed to support trusses and girder trusses from timber members.

Installation:

- Double shear nailing allows distribution of the carried members load through two points on each nail for greater strength (see illustration).
- Joist nails must be driven at 45° through the joist dome, pan or obround nail holes, into the joist, then the header to achieve the table loads.
- The thickness of the supporting timber must be equal or greater than the fastener length.
- Verify the header can take the required fasteners specified below.
- Use all specified fasteners.

Material: Pre-galvanised mild steel.

CNA RECOMMENDED FIXINGS

Product Dimensions

References	Dimensions [mm]						Header Holes		Joist Holes
	A	B	C	D	F	t	Ø5	Ø5 x 10mm Obrounds	Ø6x12
HGUS125/80N	80	125	100	66	107	2.5	16	4	8
HGUS145/80N	80	145	100	66	107	2.5	22	6	10
HGUS125/105N	105	125	100	66	107	2.5	16	4	8
HGUS145/105N	105	145	100	66	107	2.5	22	6	10
HGUS145/120N	120	145	100	66	107	2.5	22	6	10
HGUS145/155N	155	145	100	66	107	2.5	22	6	10

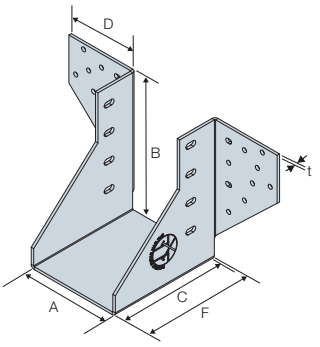

Performance Values

References	Fasteners		Safe Working Loads [kN]			Characteristic Capacity [kN]	
	Header Qty	Joist Qty	$R_{1,SWL,Long\ Term}$	$R_{1,SWL,Medium\ Term}$	$R_{2,SWL,Short\ Term}$	$R_{1,k}$	$R_{2,k}$
			CNA4.0x60	CNA4.0x60	CNA4.0x60	CNA4.0x60	CNA4.0x60
HGUS	20	8	10.1	11.5	3.9	25.1	7.8
	28	10	15.1	17.3	4.9	33.3	9.8

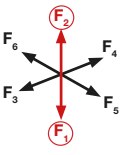

1. Performance values based upon TR26 graded timbers.
2. CNA Nails supplied.

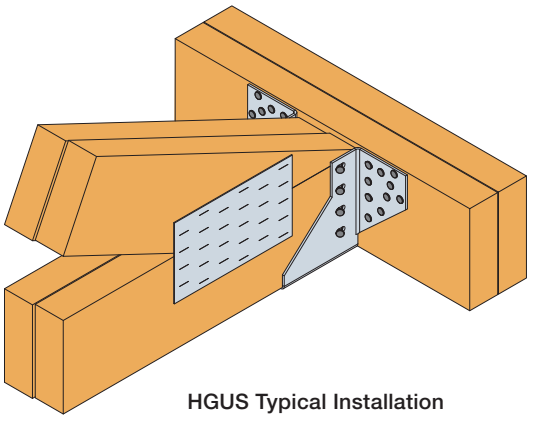

HGUS Typical Installation

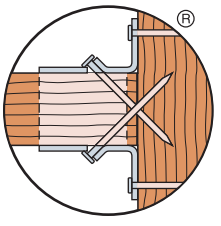

Double Shear Nailing

Unique double shear nailing feature guides the joist nails into the joist at a 45° angle. This provides easier nail driving as the installer doesn't need to swing the hammer sideways.

C-C-UK-2023 ©2023 SIMPSON STRONG-TIE COMPANY INC.

HGUQ Heavy Engineered Truss Timber Hanger

The HGUQ is a joist hanger designed to support trusses and girder trusses from timber members. The HGUQ version uses SSH screws instead of nails for even faster and easier installation.

Installation:

- The thickness of the supporting timber must be equal or greater than the fastener length.
- Verify the header can take the required fasteners specified below.
- Use all specified fasteners.
- The SSH screws help transfer the load between plies of the supporting truss when they penetrate all plies.

Material: Pre-galvanised mild steel.

SSH RECOMMENDED FIXINGS

Product Dimensions

References	Joist Dims [mm]	Dimensions [mm]						Header	Joist Holes
	Width	A	B	C	D	F	t	Ø6.4	Ø6.4
HGUQ180/105SCR	2x47	105	180	100	54.5	102.5	2.5	26	8
HGUQ180/120SCR	3x35	120	180	100	54.5	102.5	2.5	26	8
HGUQ180/155SCR	3x47	155	180	100	54.5	102.5	2.5	26	8
HGUQ180/202SCR	4x47	202	180	100	54.5	102.5	2.5	26	8

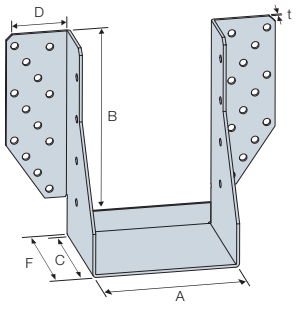

Performance Values

References	Fasteners		Safe Working Loads [kN]			Characteristic Capacity [kN]	
	Header Qty	Joist Qty	$R_{1,SWL,Long\ Term}$	$R_{1,SWL,Medium\ Term}$	$R_{2,SWL,Short\ Term}$	$R_{1,k}$	$R_{2,k}$
			SSH6.0X60	SSH6.0X60	SSH6.0X60	SSH6.0X60	SSH6.0X60
HGUQ	26	8	21.3	24.4	10.4	45.5	20.7

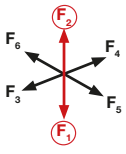

1. Performance values based upon TR26 graded timbers.
2. SSH screws supplied.

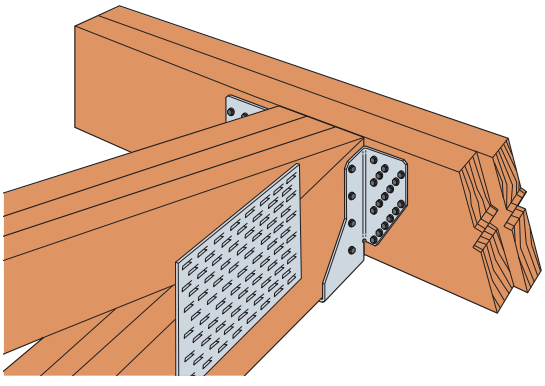

HGUQ Typical Installation

C-C-UK-2023 ©2023 SIMPSON STRONG-TIE COMPANY INC.

THGQ Heavy Duty Girder Truss Hanger

The THGQ is a heavy duty girder truss hanger designed to support multiple ply girder trusses from a vertical member of a girder truss.

- Use with SSH screws instead of bolts - simplifying installation.
- SSH screws supplied with each THGQ.
- Maintains the strength of the supporting truss as no material is removed during installation.
- Suitable for use on girder trusses with bottom chord depths equal to or greater than 147mm.

Material: Pre-galvanised mild steel.

Installation:

- Fill all holes with the specified fasteners to achive published load capacities.
- Multiple ply supporting trusses must be fastened together, as specified by the truss manufacturer, to act as one member.
- The overall thickness of the supporting trusses should be equal to or greater than the length of the SSH screw.

SSH RECOMMENDED FIXINGS

Product Dimensions

References	Vertical Support Minimum Width [mm]	Incoming Truss Width [mm]	Dimensions [mm]						Header Holes	Joist Holes
			A	B	C	D	E	t	Ø6.4	Ø6.4
THGQ80SCR	147	2x35	80	675	135	38	305	3.0	30	8
THGQ102SCR	172	2x47	102	675	135	38	305	3.0	30	8
THGQ116SCR	197	3x35	116	675	135	38	305	3.0	30	8
THGQ154SCR	197	3x47 or 4x35	154	500	135	63	305	3.0	32	8
THGQ202SCR	222	4x47	202	500	135	63	305	3.0	32	8

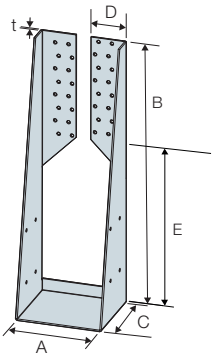

Performance Values

Reference	Fasteners		Safe Working Loads [kN]		Characteristic Capacities [kN]	
	Header	Joist	$R_{1,SWL,Medium\ Term}$	$R_{2,SWL,Short\ Term}$	$R_{1,k}$	$R_{2,k}$
	Qty	Qty	SSH6.0X60	SSH6.0X60	SSH6.0X60	SSH6.0X60
THGQ	30	8	32.5	14.4	68.2	22.4
	32	8	32.5	14.4	68.2	22.4

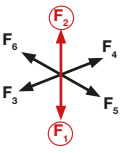

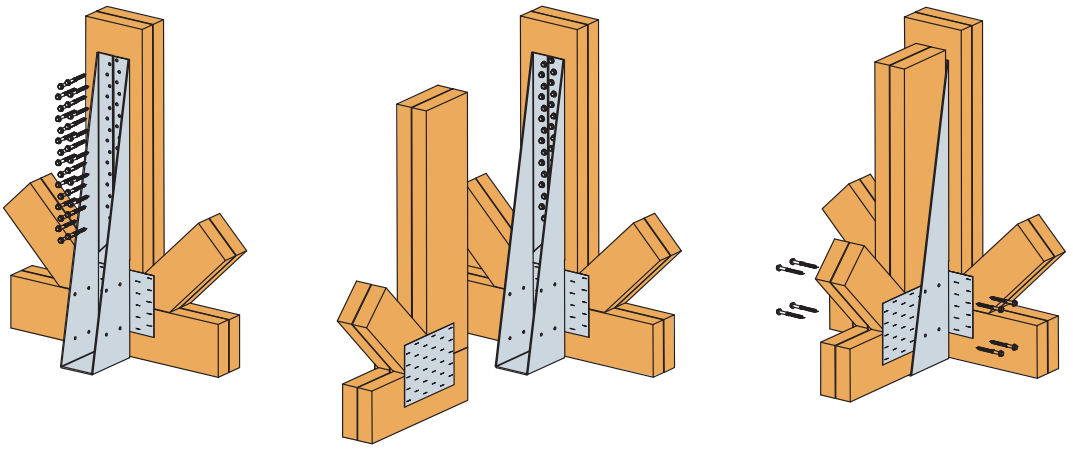

C-C-UK-2023 ©2023 SIMPSON STRONG-TIE COMPANY INC.

NP Nail Plate

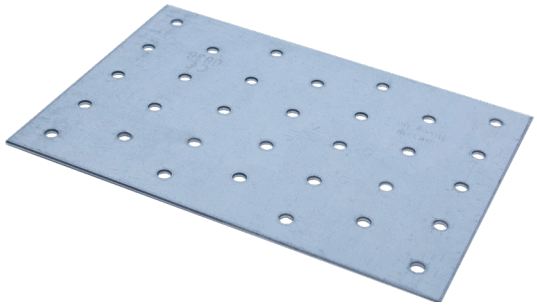

Nail plates are used to connect two or more timber members together. They are available in a variety of sizes.

Material: Pre-galvanised mild steel. Grade S250GD

Installation: Can be installed using 3.75x30mm square twist nails, CNA nails or CSA screws

STN RECOMMENDED FIXINGS

Product Dimensions

References	Dimensions [mm]			Holes	Plates Characteristic Tensile Capacity [kN]
	A	B	t	Ø5	$R_{1,st}$
NP15/40/120	40	120	1.5	9	13.4
NP15/80/140	80	140	1.5	25	26.7
NP15/80/180	80	180	1.5	32	26.7
NP15/80/200	80	200	1.5	35	26.7
NP15/80/220	80	220	1.5	39	26.7
NP15/80/260	80	260	1.5	46	26.7
NP15/100/140	100	140	1.5	32	33.4
NP15/100/200	100	200	1.5	45	33.4
NP15/100/240	100	240	1.5	54	33.4
NP15/100/300	100	300	1.5	68	33.4
NP15/140/180	140	180	1.5	59	46.8
NP15/140/200	140	200	1.5	65	46.8
NP15/140/260	140	260	1.5	85	46.8
NP15/160/340	160	340	1.5	128	53.5
NP15/200/260	200	260	1.5	124	66.8
NP15/220/300	220	300	1.5	158	73.5
NP20/40/120	40	120	2.0	9	17.8
NP20/40/160	40	160	2.0	12	17.8
NP20/50/200	50	200	2.0	20	23.8
NP20/60/140	60	140	2.0	18	26.7
NP20/80/200	80	200	2.0	35	35.6
NP20/80/240	80	240	2.0	42	35.6
NP20/80/300	80	300	2.0	53	35.6
NP20/100/140	100	140	2.0	32	44.6
NP20/100/200	100	200	2.0	45	44.6
NP20/100/240	100	240	2.0	54	44.6
NP20/100/260	100	260	2.0	61	44.6
NP20/100/300	100	300	2.0	68	44.6
NP20/100/400	100	400	2.0	32	44.6
NP20/100/500	100	500	2.0	112	44.6
NP20/120/200	120	200	2.0	55	53.5
NP20/120/240	120	240	2.0	66	53.5
NP20/120/260	120	260	2.0	72	53.5
NP20/120/300	120	300	2.0	83	53.5
NP20/120/400	120	400	2.0	110	53.5
NP20/140/400	140	400	2.0	130	62.4
NP20/160/300	160	300	2.0	113	71.3
NP20/160/400	160	400	2.0	150	71.3
NP20/200/300	200	300	2.0	143	89.1

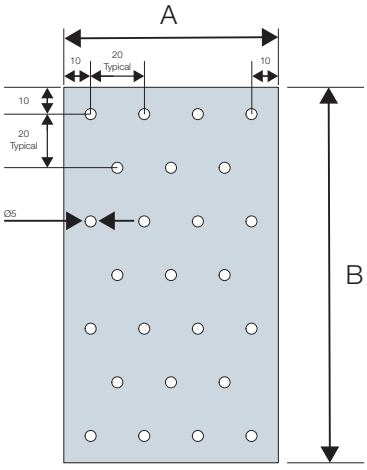

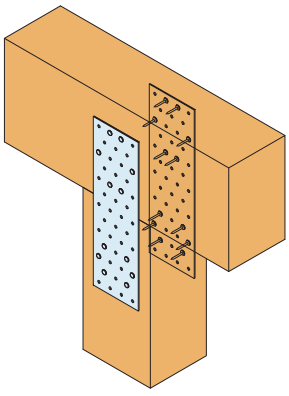

The performance values stated in the table refer to the nail plate's maximum tensile strength. The fastener capacity must be checked separately in accordance to BS EN 1995-1-1. The characteristic resistance of an NP nail plate assembly under tensile load $R_{1.k}$ is:

$R_{1.k} = min\ (R_{1.st} / k_{mod};\ R_{upper};\ R_{lower})$

Where:

$R_{1.st}$: the maximum characteristic value under tensile load as specified in the table.

R_{upper}: the resistance of the group of fasteners in the upper wall

R_{lower}: the resistance of the group of fasteners in the lower wall

$R_{upper} = n_{ef.upper} \times R_{lat.k}$

$R_{lower} = n_{ef.lower} \times R_{lat.k}$

Where:

$n_{ef.upper}$: the effective number of fasteners in the upper wall

$n_{ef.lower}$: the effective number of fasteners in the lower wall

$R_{lat.k}$: the strength of the chosen fastener

Example: NP20/140/240 joining two timber members. The aim is to determine the plate's load-bearing capacity when subjected to tensile forces.
The nailing pattern shown below is used. The following table provides the characteristic strength values ($k_{mod} = 1.1$).

References	Fasteners			
	CNA4.0x35	CNA4.0x60	CSA5.0x40	CSA5.0x50
NP20/140/240	31.5	44.8	42.7	50.5

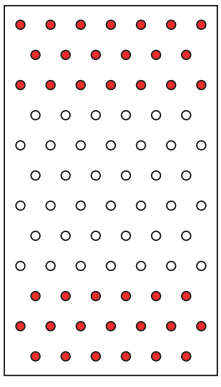

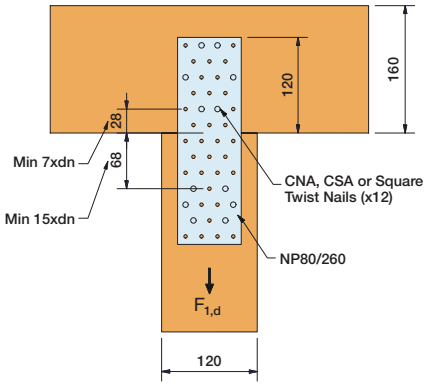

Roof Connectors

8

C-C-UK-2023 ©2023 SIMPSON STRONG-TIE COMPANY INC.

GPC Gable Panel Connector

The GPC provides lateral restraint between the wall plate/gable panel and the supporting masonry wall.

Available to suit 100mm, 115mm and 140mm masonry walls.

Material: Galvanised mild steel.

Features:

- Easy & quick to install with no masonry fasteners required.
- Sits directly on the top of the top layer of blockwork.

Installation:

- Installed directly onto the top of the block, dry bedded and spaced at a maximum of 1.2m centres.
- Mortar laid between GPC & wall plate; to allow the wall plate to be levelled.
- Fix the connector to the wall plate using Square Twist Nails or CSA Screws.
- Fix gable panel to the wall plate ensuring fasteners achieve minimum lateral characteristic capacity of 2kN/m. Fastener quantities and centers for fixing the gable panel to the wall plate to be specified.

CSA RECOMMENDED FIXINGS

STN RECOMMENDED FIXINGS

Product Dimensions

References	Dimensions [mm]						Holes Flange E
	A	B	C	D	E	t	Ø4.1
GPC100	80	100	75	50	35	2.0	2
GPC115	80	115	75	50	35	2.0	2
GPC140	80	140	75	50	35	2.0	2

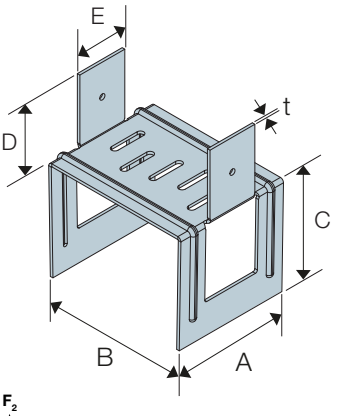

Performance Values

References	Fasteners		Safe Working Load [kN]	Characteristic Load [kN]
	Wall Plate			
	Qty	Type	$R_3=R_{4,SWL,Long\ Term}$	$R_{3,k}=R_{4,k}$
GPC	2	N3.75x30 or CSA 4.0x30	2.8	4.2

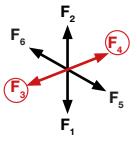

Installation

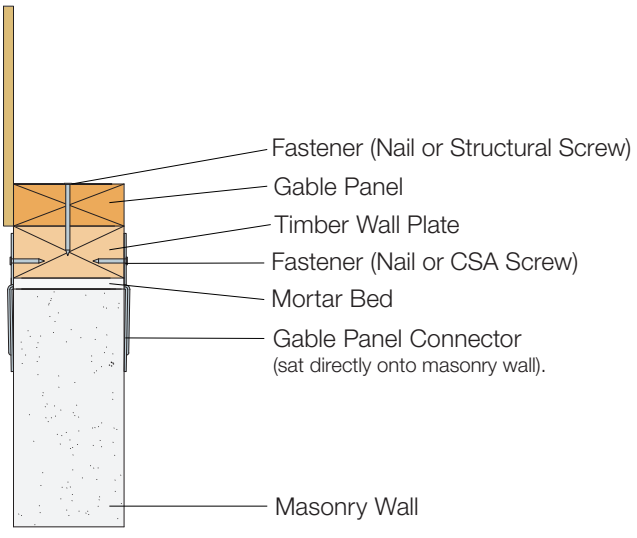

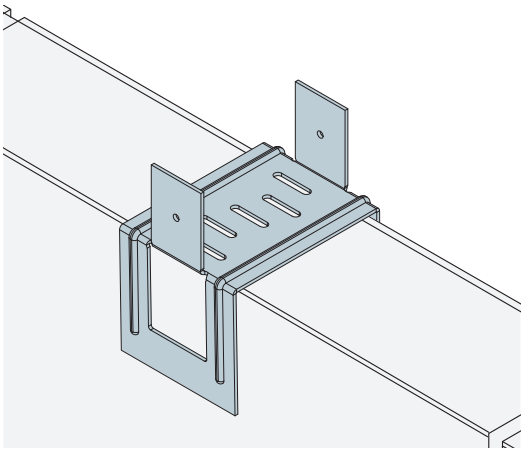

Sits directly on the top of the top layer of blockwork.

C-C-UK-2023 ©2023 SIMPSON STRONG-TIE COMPANY INC.

GPC Gable Panel Connections

The GPC provides a verified connection when connecting timber gable panels to masonry walls and the roof structure. The connectors have been developed to safely transfer lateral wind loads on the masonry and the timber gable ends into the braced diaphram, giving installation options onto a continuous wall plate as well as a raised wall plate.

Gable Panel Connections - Continuous Wall Plate

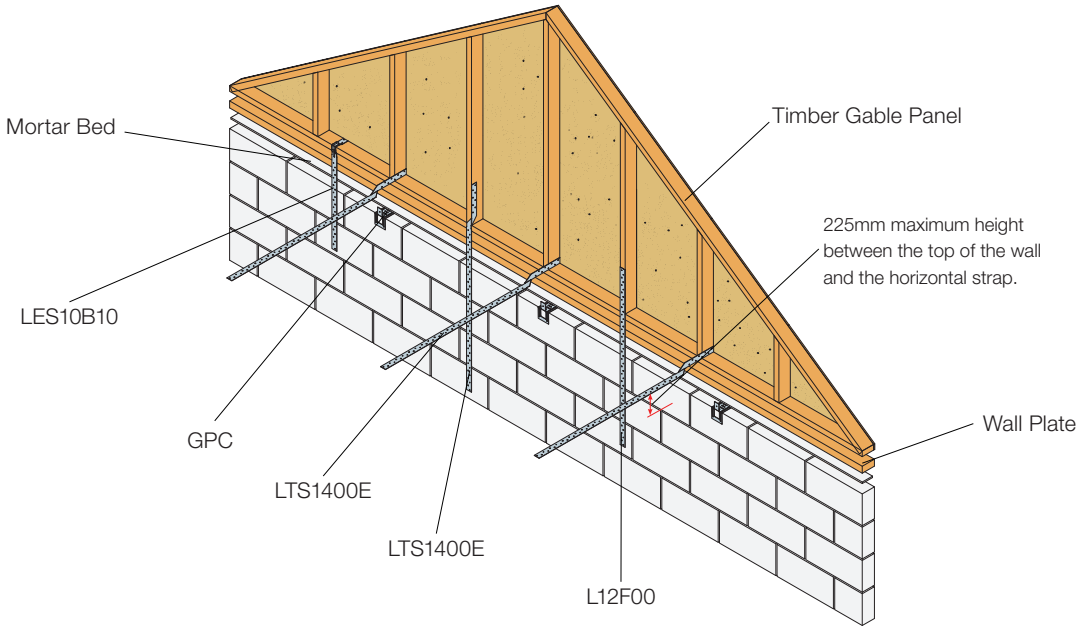

Gable Panel Connections - Raised Wall Plate

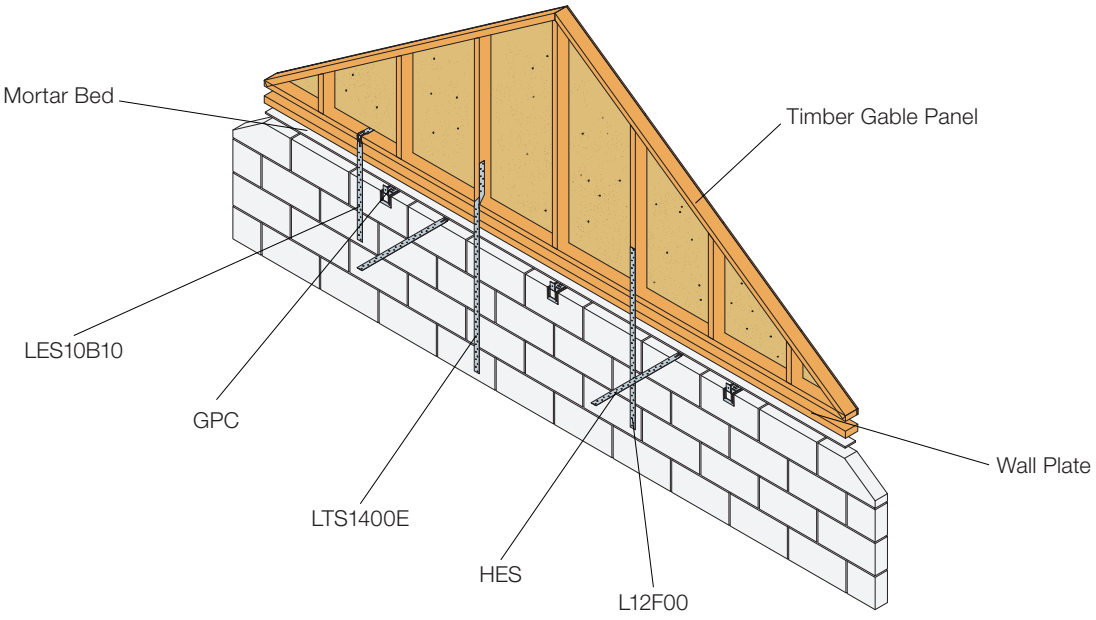

Connection details between the gable panel and wall plate are to be designed by the building designer ensuring required loads are transferred between the timber gable panel and the wallplate.

For the transfer of wind loads from the gable wall (timber gable panel and/or masonry) to the roof structure, either LTS1400E or HES15B10 lateral restraint straps should be used. To hold the timber gable panel down onto the supporting masonry wall, either LES10B10, LTS1400E or L12F00 should be used.

GPC is to be installed at a maximum of 1.2m centres.

Reference should be made to the Truss Rafter Association's technical guidance on Gable Wall/Spandrel Panels for additional construction details.

C-C-UK-2023 ©2023 SIMPSON STRONG-TIE COMPANY INC.

JES Joist End Support

The JES is a two piece metal-work system which enables the use of engineered timber I-Joists in loft conversions, offering a safe and economic alternative to the traditional method which requires steel girders.

It provides reinforcement to the joist ends where they are cut to fit within the eaves of the existing roof. Each JES is supplied as 2 plates, as required for each joist end.

Material: Pre-galvanised mild steel.

Installation:

- The I-Joists are installed from wall plate to wall plate, which means there is no need for a costly Party Wall Agreement.
- Steel beams can be eliminated, so there is no need for a crane, or to remove all the roof tiles.

Product Dimensions

References	Dimensions [mm]			Holes	
	A	B	t	Ø6.4	4 x 6 Obround
JES099SCR	99	18	2.5	2	2
JES116SCR	116	18	2.5	3	2
JES124SCR	124	18	2.5	3	2
JES136SCR	136	18	2.5	3	2
JES139SCR	139	18	2.5	3	2
JES149SCR	149	18	2.5	4	2
JES156SCR	156	18	2.5	5	2
JES179SCR	179	18	2.5	5	2
JES204SCR	204	18	2.5	5	2
JES216SCR	216	18	2.5	5	2
JES240SCR	240	18	2.5	5	2
JES254SCR	254	18	2.5	5	2
JES276SCR	276	18	2.5	5	2
JES294SCR	294	18	2.5	5	2
JES304SCR	304	18	2.5	5	2
JES316SCR	316	18	2.5	5	2

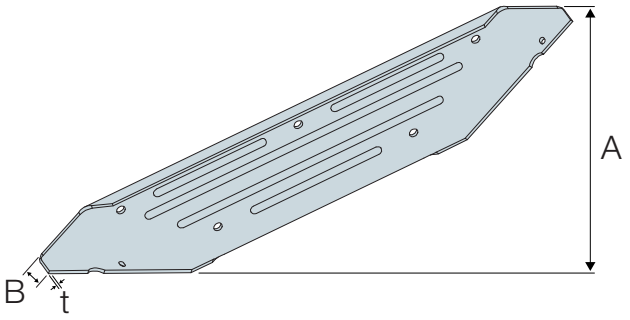

Why Convert Lofts Using I-Joists?

- No need to install steel girders.
- No need to hire a crane.
- I-Joists installed from wall plate to wall plate.
- No need for a Party Wall Agreement.
- Light weight.
- Loft conversions also possible in timber frame houses.
- Suits roof slopes of 30° or greater.

JES Installation

Step 1:

Use one plate as a template to mark the cut line and fastener hole positions on the end of the I-Joist as shown, ensuring that the ends are flush. Remove the JES plate before cutting and drilling the I-Joist.

Step 2:

Cut and drill the I-Joist. Use a 6mm diameter drill bit to create the holes.

Step 3:

Securely install a JES plate on both sides of the I-Joist using the M6 x 30mm Hex bolts and washers supplied. Note the position of the lip on the JES which must be installed with the lip following the top-most edge of the adapted I-Joist.

Step 4:

Position I-Joist in between the existing trusses as shown, ensuring that a minimum 90mm of end bearing is achieved. Joist layouts will vary - please refer to engineer responsible for floor design.

C-C-UK-2023 ©2023 SIMPSON STRONG-TIE COMPANY INC.

JES Joist End Support

JES Installation

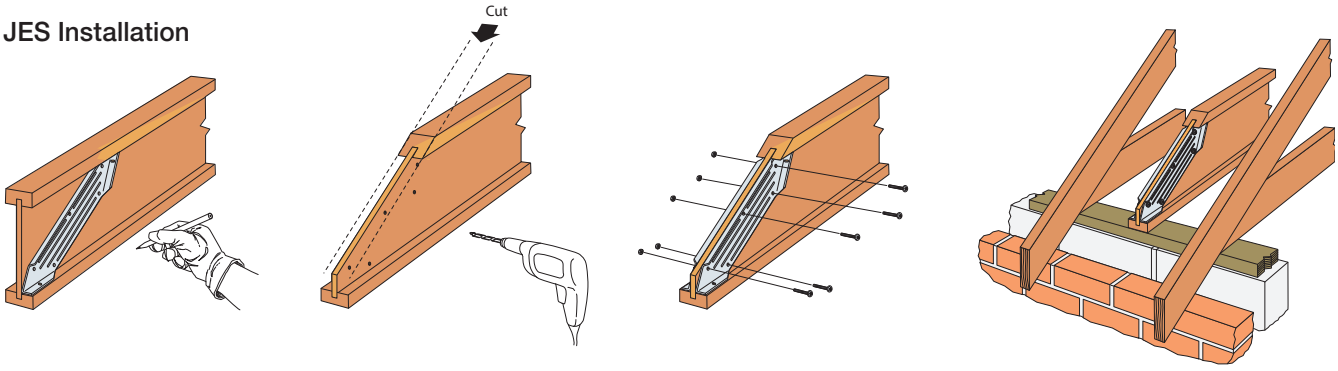

Step 1 Step 2 Step 3 Step 4

Performance Values

I-Joist Manufacturer	Joist Width [mm]	Joist Height [mm]	References	Joist End Bearing Capacity [kN]			
				Safe Working Loads			Characteristic Capacity
				Long Term	Medium Term	Short Term	
James Jones	47-97	195	JES099SCR	2.4	3.1	4.0	8.1
		220	JES124SCR	2.4	3.1	4.0	8.1
		235	JES139SCR	2.4	3.1	4.0	8.1
		240	JES139SCR	2.4	3.1	4.0	8.1
		245	JES149SCR	2.4	3.1	4.0	8.1
		300	JES204SCR	3.0	3.8	4.9	9.8
		350	JES254SCR	3.2	4.0	5.2	10.5
		400	JES304SCR	3.6	4.6	5.9	12.0
Masonite	47-97	220	JES116SCR	2.4	3.1	4.0	8.1
		240	JES139SCR	2.4	3.1	4.0	8.1
		300	JES179SCR	3.0	3.8	4.9	9.8
		350	JES240SCR	3.2	4.0	5.2	10.5
		400	JES294SCR	3.6	4.6	5.9	12.0
MetsaWood	45-96	200	JES116SCR	2.3	3.0	3.8	7.7
		220	JES136SCR	2.3	3.0	3.8	7.7
		240	JES156SCR	3.5	4.4	5.7	11.5
		300	JES216SCR	3.5	4.4	5.7	11.5
		360	JES276SCR	3.5	4.4	5.7	11.5
		400	JES316SCR	3.5	4.4	5.7	11.5
Steico	45-90	200	JES116SCR	2.3	3.0	3.8	7.7
		220	JES136SCR	2.3	3.0	3.8	7.7
		240	JES156SCR	3.3	4.2	5.4	10.9
		300	JES216SCR	3.3	4.2	5.4	10.9
		360	JES276SCR	3.3	4.2	5.4	10.9
		400	JES316SCR	3.3	4.2	5.4	10.9

VP Loft Vent Plate

The VP is part of the I-Loft system.

The vent plate is galvanised steel plate which provides a fast and cost effective solution to providing ventilation in the roof space.

Once installed, it allows the six 20mm diameter holes to be drilled, whilst maintaining the strength of the solid sawn timber.

By providing a ventilation path though the roof, over the insulation in the loft conversion ceiling, the condensation problems arising from the difference in temperature between the inside and outside are avoided.

Material: Pre-galvanised mild steel.

STN RECOMMENDED FIXINGS

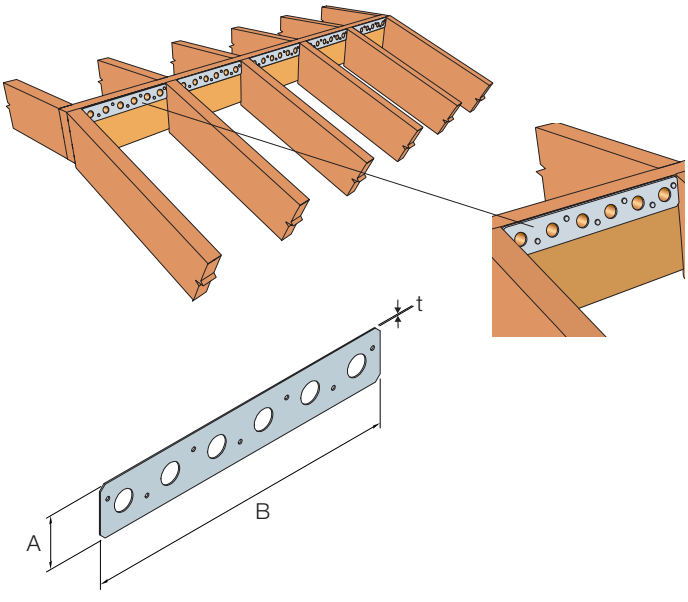

Product Dimensions

References	Dimensions [mm]			Holes		Fasteners N3.75x30
	A	B	t	Ø4.1	Ø20	
VP50/300	50	300	1.2	7	6	7

C-C-UK-2023 ©2023 SIMPSON STRONG-TIE COMPANY INC.

RR Ridge Rafter Connector

The RR ridge rafter connector provides alignment control and correct nailing locations. The RR may be used with any rafter slope up to 30°.

For back-to-back installations, the minimum width of the ridge plate is 38mm.

Material: Pre-galvanised mild steel.

Installation: Use all specified fasteners.

Product Dimensions

References	Joist Dimensions [mm]			Dimensions [mm]					Header Holes	Joist Holes
	Width	Height								
	Max	Min	Max	A	B	C	D	t	Ø4	Ø4
RR	38	95	125	38	83	33	102	1.2	4	4
RR47	47	95	125	47	83	33	114	1.2	4	4

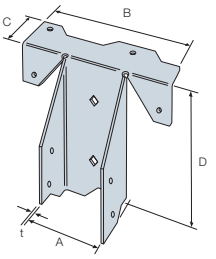

Performance Values

Reference	Fasteners		Safe Working Loads [kN]	Characteristic Capacities [kN]
	Header	Joist	$R_{1,SWL,Long\ Term}$	$R_{1,k}$
	Qty	Qty	N3.75x30	N3.75x30
RR - RR47	4	4	1.4	0.6

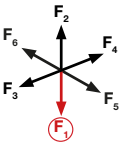

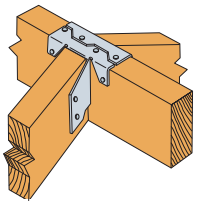

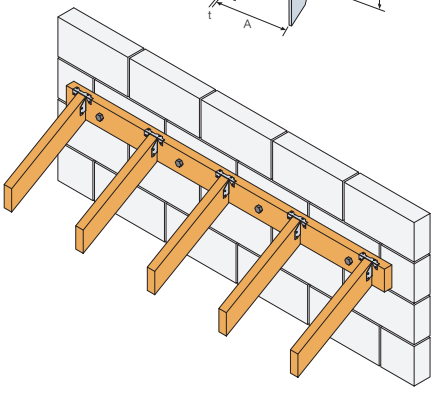

SPR Timber Joist Hanger Slope Adjustable

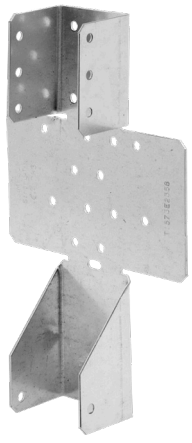

The SPR connector supports rafters from other timber members and can be sloped up or down by up to 45°.

- Slope angle can be adjusted on-site.
- Adjustable between 0 and 45°, up or down.
- Supports a range of timber heights from 145mm to 250mm.

Material: Pre-galvanised mild steel.

Installation:

- Use all specified fasteners.
- Bend only once.
- To ensure proper seat installation, install the bottom nails prior to the side nails.
- Attach the sloped joist at both ends so that the horizontal force developed by the slope is fully supported by the carried members.

Product Dimensions

References	Dimensions [mm]			Dimensions [mm]						Header Holes	Joist Holes	
	Width	Height										
	Max	Min	Max	A	B	C	D	F	t	Ø5	Ø5	Tri
SPR47/140	47	145	200	47	140	74	43	78	1.5	13	8	2
SPR47/200	47	200	250	47	200	74	43	78	1.5	17	14	2
SPR91/140	91	145	200	91	140	74	43	78	1.5	18	8	2
SPR91/200	91	200	250	91	200	74	43	78	1.5	24	14	2

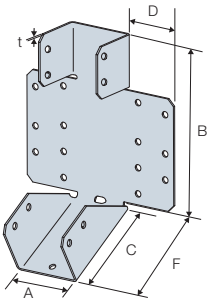

Performance Values

References	Fasteners		Safe Working Loads [kN]			Characteristic Capacities [kN]	
	Header	Joist	$R_{1,SWL,Long\ Term}$	$R_{1,SWL,Medium\ Term}$	$R_{2,SWL,Short\ Term}$	$R_{1,k}$	$R_{2,k}$
	Qty	Qty	N3.75x30	N3.75x30	N3.75x30	N3.75x30	N3.75x30
SPR47/140	13	10	2.5	2.9	3.0	6.0	6.0
SPR47/200	17	16	5.1	5.8	6.1	12.2	12.2
SPR91/140	18	10	3.5	4.0	4.2	8.3	8.3
SPR91/200	24	18	6.0	6.9	7.2	14.5	14.5

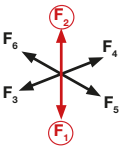

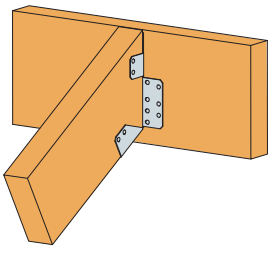

C-C-UK-2023 ©2023 SIMPSON STRONG-TIE COMPANY INC.

VPA Variable Pitch Connector

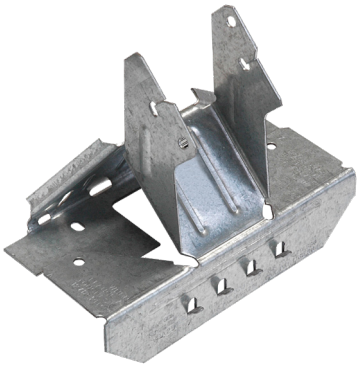

The VPA is an engineered one-piece connector for attaching I-Joist rafters to wall plates.

- The VPA is adjustable to slopes between 15° and 45° with a special interlock design indicating when the maximum pitch is reached. This product complements the versatile LSSU.
- Designed for use with double 38mm top plates with a 50mm seat, which allows sufficient bearing area for most rafters.
- No notching of the I-Joist is required when using the VPA. This connector reduces the need for bevelled plates and toenailing. It has positive angle nailing to speed installation and to minimise wood splitting.

Material: Pre-galvanised mild steel.

Installation:
Use all specified fasteners.
Face fasteners attached to both upper and lower top plates. See VPA installation sequence shown below.

RWN RECOMMENDED FIXINGS

STN RECOMMENDED FIXINGS

Product Dimensions

References	Joist Width [mm]	Dimensions [mm]				Header Holes [mm]			Joist Holes
		A	B	C	t	Obrounds		Holes	Obrounds
						Ø4x6	PAN	Ø4.1	Ø4x6
VPA25	45	46	133	67	1.2	2	4	2	2
VPA50	47	50	124	62	1.2	3	4	2	2
VPA56	53	56	124	62	1.2	3	4	2	2
VPA61	58-60	61	132	62	1.2	3	4	2	2
VPA66	63	66	132	62	1.2	3	4	2	2
VPA72	70	72	137	62	1.2	3	4	2	2
VPA75	75	75	145	67	1.2	3	6	2	2
VPA4	90	90	183	67	1.2	3	6	2	2
VPA96	(2) 47	96	166	67	1.2	3	6	2	2
VPA99	96-97	99	170	67	1.2	3	6	2	2

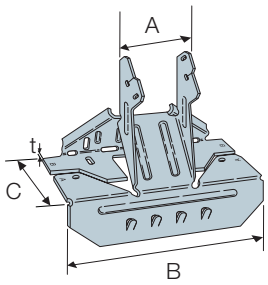

Performance Values

References	Fasteners		Safe Working Loads [kN]			Characteristic Capacities [kN]								
	Header	Joist				Solid Section			I-Joists					
	N3.75x75	N3.75x30							LVL Flanges			Solid Flanges		
	Qty	Qty	$R_{1,SWL,Med\ Term}$	$R_{2,SWL,Short\ Term}$	$R_{3\&4,SWL,Short\ Term}$	$R_{1,k}$	$R_{2,k}$	$R_{3\&4,k}$	$R_{1,k}$	$R_{2,k}$	$R_{3,k}=R_{4,k}$	$R_{1,k}$	$R_{2,k}$	$R_{3,k}=R_{4,k}$
VPA25	8	2	3.7	1.1	1.5	5.6	1.4	1.0	5.6	3.9	1.9	5.6	1.4	0.7
VPA50	9	2	2.5	0.7	0.5	5.2	1.4	1.0	5.2	3.9	1.9	5.2	1.4	0.7
VPA56	9	2	2.7	0.7	0.5	5.6	1.4	1.0	5.6	3.9	1.9	5.6	1.4	0.7
VPA61	9	2	2.7	0.7	0.5	5.6	1.4	1.0	5.6	3.9	1.9	5.6	1.4	0.7
VPA66	9	2	2.7	0.7	0.5	5.6	1.4	1.0	5.6	3.9	1.9	5.6	1.4	0.7
VPA72	9	2	2.7	0.7	0.5	5.6	1.4	1.0	5.6	3.9	1.9	5.6	1.4	0.7
VPA75	11	2	3.7	0.7	0.5	7.8	1.4	1.0	7.8	3.9	1.9	7.8	1.4	0.7
VPA4	11	2	3.7	0.7	0.5	7.8	1.4	1.0	7.8	3.9	1.9	7.8	1.4	0.7
VPA96	11	2	3.7	0.7	0.5	7.8	1.4	1.0	7.8	3.9	1.9	7.8	1.4	0.7
VPA99	11	2	3.7	0.7	0.5	7.8	1.4	1.0	7.8	3.9	1.9	7.8	1.4	0.7

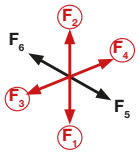

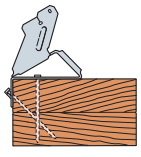

Install top nails and face PAN nails in the "A" flange outside wall top plate.

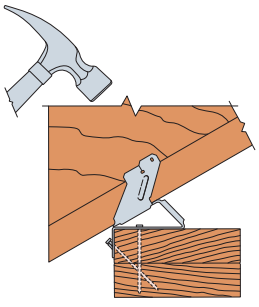

Seat rafter with a hammer, adjusting the "B" flange to the required pitch.

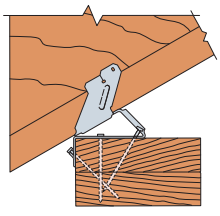

Install "B" flange nails in the obround nail holes, locking the pitch.

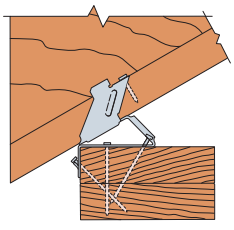

Install rafter PAN nails.

C-C-UK-2023 ©2023 SIMPSON STRONG-TIE COMPANY INC.

LSSU/LSU Light Slope & Skew Adjustable Hangers

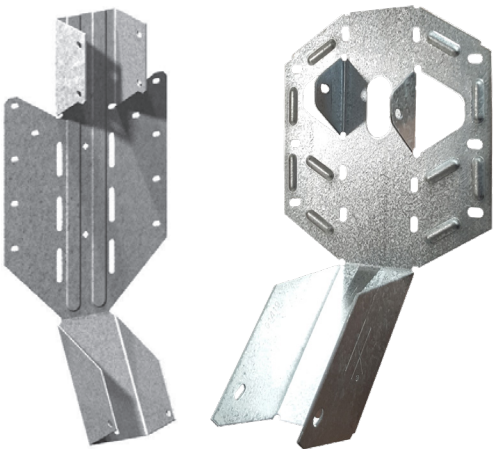

LSSU LSU

With these site adjustable hangers, you can always have the right hanger available for those special rush projects. This versatile range of products attaches joists/rafters to timber supports at any slope, up or down or at any skew, left or right up to and including 45°. All models are slope and skew adjustable on site, excluding the LSU228/108, LSU228/120 and the LSU124/38 which are slope only.

Material: Pre-galvanised mild steel.

Installation:

- Use all specified fasteners.
- Bend only once.

To ensure proper seat installation, install the bottom nails before the side nails. Attach the sloped joist at both ends so the horizontal force developed by the slope is fully supported by the carried members. Web stiffeners are required with I-Joists using this hanger style. For field skewing, see install sequence below.

RWN RECOMMENDED FIXINGS STN RECOMMENDED FIXINGS

Product Dimensions

References	Joist [mm]			Dimensions [mm]					Header Holes				Joist Holes
	Width	Height							Obrounds				Obrounds
	Max	Min	Max	A	B	C	D	t	Ø4x6	Ø5x17	Ø5x25	Ø5x44	Ø4x6
LSU124/38	38	150	150	40	124	75	38	1.2	14	-	-	-	5
LSSU181/38	38	241	241	41	181	90	44	1.2	10	-	6	-	5
LSSU216/38	38	302	302	41	216	90	44	1.2	10	-	6	-	7
LSSU216/45	45	241	356	48	216	90	44	1.2	10	-	6	-	7
LSSU170/50	50	195	245	50	170	90	58	1.2	10	6	-	-	11
LSSU275/50	50	300	450	50	275	90	58	1.5	18	-	-	6	11
LSSU216/52	52	241	356	53	216	90	47	1.2	10	-	6	-	7
LSSU216/60	60	241	356	61	216	90	50	1.2	10	-	6	-	7
LSSU170/66	66	195	245	66	170	90	58	1.2	10	6	-	-	11
LSSU275/66	66	300	450	66	275	90	58	1.5	18	-	-	6	11
LSSU170/71	71	195	300	71	170	90	65	1.2	10	6	-	-	11
LSSU275/71	71	300	450	71	275	90	65	1.5	18	-	-	6	11
LSSU170/75	75	195	300	75	170	90	65	1.2	10	6	-	-	11
LSSU275/75	75	300	400	75	275	90	65	1.5	18	-	-	6	11
LSSU216/78	78	241	241	80	216	90	75	1.2	18	-	6	-	12
LSSU216/90	90	241	356	90	216	90	69	1.2	18	-	6	-	12
LSSU170/96	96	195	300	96	170	90	80	1.2	10	6	-	-	11
LSSU275/96	96	300	450	96	275	90	80	1.5	18	-	-	6	11
LSSU170/100	100	195	300	100	170	90	80	1.2	10	6	-	-	11
LSSU275/100	100	300	400	100	275	90	80	1.5	18	-	-	6	11
LSU228/105	105	241	356	105	229	90	59	2	24		-	-	16
LSU228/120	120	241	356	120	229	90	89	2	24		-	-	16

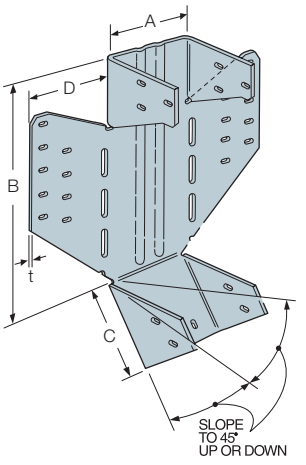

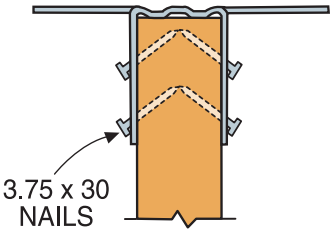

Nail hanger to slope-cut carried member, installing seat nail first. No bevel necessary for skewed installation.

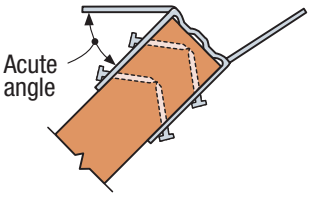

Skew flange to form acute angle. Bend other flange back along centre line of slots. Bend once only.

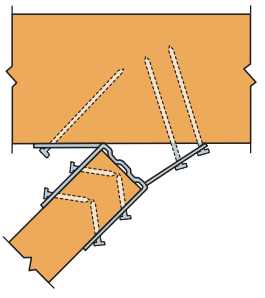

Attach hanger to the carrying member, acute angle side first, install nails at an angle.

C-C-UK-2023 ©2023 SIMPSON STRONG-TIE COMPANY INC.

LSSU/LSU Light Slope & Skew Adjustable Hangers

SIMPSON Strong-Tie®

Performance Values - Sloped Hangers Only

References	Fasteners			Safe Working Loads [kN]						Characteristic Capacities [kN]			
	Header		Joist	LVL Flanged I-Joist			Solid Sawn Flanged I-Joist or C24 Solid Section			LVL Flanged I-Joist		Solid Sawn Flanged I-Joist or C24 Solid Section	
	N3.75 x75	N4.0 x100	N3.75 x30	$R_{1,SWL,Long\ Term}$	$R_{1,SWL,Medium\ Term}$	$R_{2,SWL,Short\ Term}$	$R_{1,SWL,Long\ Term}$	$R_{1,SWL,Medium\ Term}$	$R_{2,SWL,Short\ Term}$	$R_{1,k}$	$R_{2,k}$	$R_{1,k}$	$R_{2,k}$
	Qty	Qty	Qty										
LSU124/38	6	-	5	2.8	3.2	1.3	3.0	3.5	1.3	6.8	2.6	7.3	2.6
LSSU181/38	10	-	5	2.1	2.4	1.2	3.0	3.5	1.2	5.1	2.4	7.3	2.4
LSSU216/38	10	-	7	2.1	2.4	1.2	3.0	3.5	1.2	5.1	2.4	7.3	2.4
LSSU216/45	10	-	7	2.1	2.4	1.2	3.0	3.5	1.2	5.1	2.4	7.3	2.4
LSSU170/50	10	-	11	-	-	-	4.7	5.4	2.9	-	-	11.4	5.7
LSSU275/50	18	-	11	-	-	-	4.4	5.0	2.9	-	-	10.6	5.7
LSSU216/52	10	-	7	2.1	2.4	1.2	-	-	-	5.1	2.4	-	-
LSSU216/60	10	-	7	2.1	2.4	1.2	4.1	4.7	2.0	5.1	2.4	9.9	4.0
LSSU170/66	10	-	11	-	-	-	4.7	5.4	2.9	-	-	11.4	5.7
LSSU275/66	18	-	11	-	-	-	4.4	5.0	2.9	-	-	10.6	5.7
LSSU170/71	10	-	11	3.8	4.4	1.2	4.7	5.4	2.9	9.1	2.4	11.4	5.7
LSSU275/71	18	-	11	3.8	4.4	1.2	4.4	5.0	2.9	9.1	2.4	10.6	5.7
LSSU170/75	10	-	11	-	-	-	4.7	5.4	2.9	-	-	11.4	5.7
LSSU275/75	18	-	11	-	-	-	4.4	5.0	2.9	-	-	10.6	5.7
LSSU216/78	18	-	12	3.8	4.4	1.2	-	-	-	9.1	2.4	-	-
LSSU216/90	18	-	12	4.7	5.3	1.5	5.2	5.9	2.4	11.2	3.0	12.5	4.8
LSSU170/96	10	-	11	-	-	-	4.7	5.4	2.9	-	-	11.4	5.7
LSSU275/96	18	-	11	-	-	-	4.4	5.0	2.9	-	-	10.6	5.7
LSSU170/100	10	-	11	-	-	-	5.5	6.2	2.9	-	-	13.1	5.7
LSSU275/100	18	-	11	-	-	-	6.0	6.8	2.9	-	-	14.3	5.7
LSU228/105	-	24	16	4.7	5.3	3.0	-	-	-	11.2	6.0	-	-
LSU228/120	-	24	16	6.3	7.2	3.0	5.2	6.0	2.3	15.2	6.0	12.6	4.6

Performance Values - Skewed Hangers or Sloped & Skewed

References	Fasteners			Safe Working Loads [kN]						Characteristic Capacities [kN]			
	Header		Joist	LVL Flanged I-Joist			Solid Sawn Flanged I-Joist or C24 Solid Section			LVL Flanged I-Joist		Solid Sawn Flanged I-Joist or C24 Solid Section	
	N3.75 x75	N4.0 x100	N3.75 x30	$R_{1,SWL,Long\ Term}$	$R_{1,SWL,Medium\ Term}$	$R_{2,SWL,Short\ Term}$	$R_{1,SWL,Long\ Term}$	$R_{1,SWL,Medium\ Term}$	$R_{2,SWL,Short\ Term}$	$R_{1,k}$	$R_{2,k}$	$R_{1,k}$	$R_{2,k}$
	Qty	Qty	Qty										
LSSU181/38	9	-	5	1.4	1.6	0.7	1.4	1.5	1.2	3.5	1.5	3.2	2.4
LSSU216/38	9	-	7	1.4	1.6	0.7	1.4	1.5	1.2	3.5	1.5	3.2	2.4
LSSU216/45	9	-	7	1.4	1.6	0.7	3.4	3.9	1.2	3.5	1.5	8.1	2.4
LSSU170/50	9	-	11	-	-	-	2.6	3.0	2.9	-	-	6.3	5.7
LSSU275/50	15	-	11	-	-	-	4.5	5.1	2.9	-	-	10.8	5.7
LSSU216/52	9	-	7	1.4	1.6	0.7	-	-	-	3.5	1.5	-	-
LSSU216/60	9	-	7	1.4	1.6	0.7	3.4	3.9	2.0	3.5	1.5	8.1	4.0
LSSU170/66	9	-	11	-	-	-	2.6	3.0	2.9	-	-	6.3	5.7
LSSU275/66	15	-	11	-	-	-	4.5	5.1	2.9	-	-	10.8	5.7
LSSU170/71	9	-	11	2.8	3.2	1.2	2.6	3.0	2.9	6.8	2.4	6.3	5.7
LSSU275/71	15	-	11	2.8	3.2	1.2	2.6	3.0	2.9	6.8	2.4	6.3	5.7
LSSU170/75	9	-	11	-	-	-	2.6	3.0	2.9	-	-	6.3	5.7
LSSU275/75	15	-	11	-	-	-	4.5	5.1	2.9	-	-	10.8	5.7
LSSU216/78	14	-	12	2.8	3.2	1.2	-	-	-	6.8	2.4	-	-
LSSU216/90	14	-	12	3.0	3.4	1.5	3.0	3.4	2.4	7.2	3.0	7.1	4.8
LSSU170/96	9	-	11	-	-	-	2.6	3.0	2.9	-	-	6.3	5.7
LSSU275/96	15	-	11	-	-	-	4.5	5.7	2.9	-	-	10.8	5.7
LSSU170/100	9	-	11	-	-	-	2.0	2.2	2.9	-	-	4.7	5.7
LSSU275/100	15	-	11	-	-	-	3.4	3.9	2.9	-	-	8.2	5.7
LSU228/105	-	24	16	3.0	3.4	1.5	-	-	-	7.2	3.0	-	-
LSU228/120	-	24	16	4.6	5.3	1.8	5.0	5.7	2.3	11.1	3.7	11.9	4.6

Note: LSU228/105 and LSU228/120 are factory skewed, site sloped.

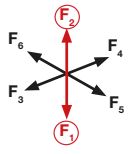

C-C-UK-2023 ©2023 SIMPSON STRONG-TIE COMPANY INC.

VTCR Valley Truss Clip

The VTCR is a single-sided valley truss clip that provides a positive connection between the valley truss and the supporting truss. The VTCR eliminates the need to add a support wedge under the valley truss or to bevel the bottom chord to match the roof pitch.

- Structural valley connection.
- Single sided for new construction or retro fit.
- Field adjustment for pitch. Adjustable between 10 and 40 degrees.
- Eliminates bottom chord bevelling or wedging.
- Reduces valley installation cost.
- Reduces valley truss manufacture cost.
- Suitable for use with 35mm and 47mm wide truss timbers
- The dome holes assist in installing the fasteners into the supporting truss at approximately 45°

Material: Pre-galvanised mild steel.

Product Dimensions

References	Dimensions [mm]				Flange B	Flange C
	A	B	C	t	Ø3.8 Dome	Ø4
VTCR	64	51	90	1.2	4	3

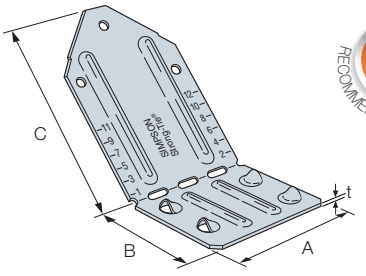

RWN RECOMMENDED FIXINGS

STN RECOMMENDED FIXINGS

Performance Values

References	Number of Fasteners				Characteristic Capacity [kN]			Safe Working Loads [kN]		
	Common Truss (Flange B)		Valley Truss (Flange C)		$R_{1,K}$		$R_{2,K}$	$R_{1,SWL,Long\ Term}$		$R_{2,SWL,Short\ Term}$
	Qty	Specification	Qty	Specification	35mm	47mm		35mm	47mm	
VTCR	4	N3.35x65	3	N3.75x30	6.0	8.0	1.0	2.5	3.3	0.5

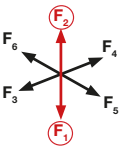

1. 35mm and 47mm refers to the thickness of the supporting common truss timbers.
2. R_2 loads are applicable to 35mm and 47mm timbers.

Installation:

- Install VTCR will all specified fasteners: 3.35x65mm round wire nails into the supporting truss and 3.75x30mm square twist nails into the valley truss
- Position the VTCR onto the supporting truss and install the 3.35x65mm nail at an angle of 45° through the dome nail holes. (Fig 1)
  Note: when the supporting truss is 35mm thick, a portion of the nails will be exposed before penetrating into the side of the truss (Fig 3)
- Bend the uppper flange of the VTCR to the required angle; position the valley truss against this leg and install the 3.75x30mm nail into the bottom chord of the valley truss (Fig 1)
- Install a VTCR on each of the top chords of the supporting trusses at each intersection of supporting truss and valley truss

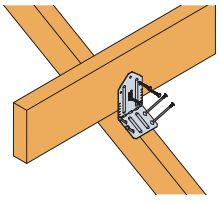

Fig 1: VTCR - Nailing positions

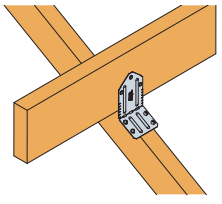

Fig 2: VTCR - All nails installed

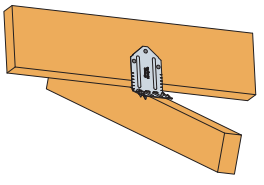

Fig 3: VTCR - View showing correct fastener installation into supporting truss

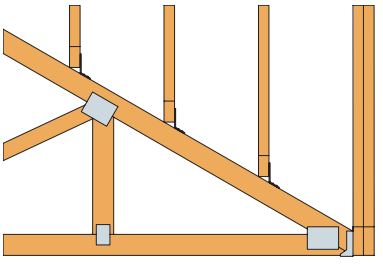

VTCR - Typical installation

C-C-UK-2023 ©2023 SIMPSON STRONG-TIE COMPANY INC.

HRC Hip Ridge Connector

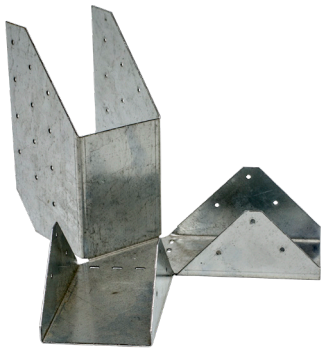

The HRC is a one-piece connector for supporting hip members from the ridge beam or rafters.

It is site adjustable for slopes up to 45°, to cater for the hip pitch for both left and right rafters.

Material: Pre-galvanised mild steel.

Installation:

- On the end of the ridge, use optional slots to secure the HRC50 and HRC46. Bend face flanges back flush with the ridge, and complete the nailing.
- On face of ridge, adjust to correct height and install nails.
- Obround nail holes ease rafter installation.
- Optional diamond holes on the HRC range (except HRC90) are for installation convenience.
- Double bevel cut hip members to achieve full bearing capacity.
- May be sloped to 45° with no reduction in loads.

RWN RECOMMENDED FIXINGS

STN RECOMMENDED FIXINGS

Product Dimensions

References	Ridge Thickness [mm]	Dimensions [mm]					Header Holes		Joist Holes		
		A	B	C	D	t	Ø4	Ø4.3	Ø4.3	Ø4 3x8 Obround	Ø4x6 Obround
HRC46	38 - 50	46	118	87	218	1.5	-	16	-	4	-
HRC50	38 - 50	50	118	87	218	1.5	16	-	-	-	4
HRC90	90	90	216	148	90	2.0	-	24	12	-	-

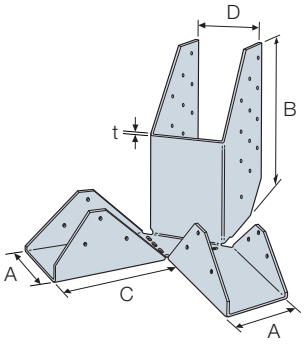

HRC90

Performance Values

References	Fasteners		Safe Working Loads [kN]				Characteristic Capacities [kN]			
	Header	Joist	$R_{1,SWL,Medium\ Term}$		$R_{2,SWL,Short\ Term}$		$R_{1,k}$		$R_{2,k}$	
	Qty	Qty	N3.75x30	N4.0x90	N3.75x30	N4.0x90	N3.75x30	N4.0x90	N3.75x30	N4.0x90
HRC	16	4	3.5	-	0.9	-	2.8	-	0.9	-
	24	12	-	6.8	-	1.9	-	10.4	-	3.5

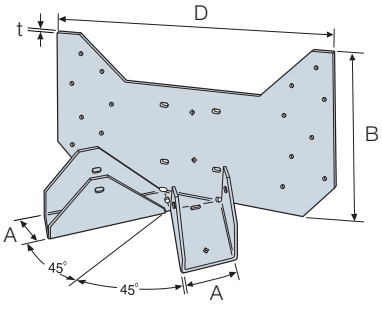

HRC46 & HRC50

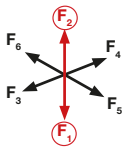

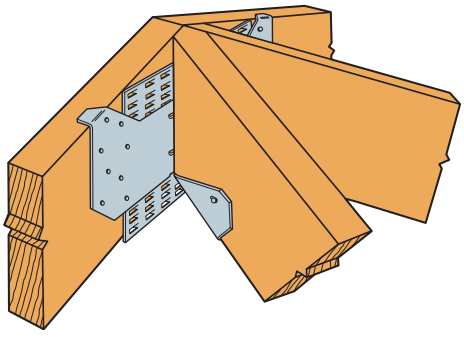

Typical HRC46 & HRC50 Installation

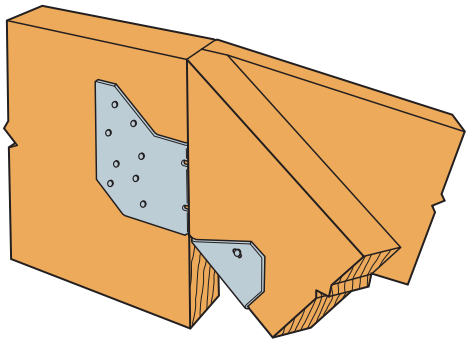

Typical HRC90 Installation

C-C-UK-2023 ©2023 SIMPSON STRONG-TIE COMPANY INC.

TFLS Levelling System

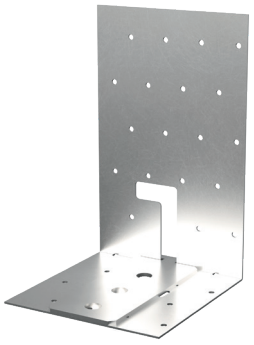

The TFLS provides the combined function of levelling and fixing the timber sole plate to the foundation or substructure.

It comprises a universal base plate and packing pieces which can be added or removed as required. The system transfers vertical and lateral loads from the wall to the foundation.

Material: Pre-galvanised mild steel.

- Suitable for use with traditional timber frame walls and closed panel systems.
- Adaptable - accommodates structural packing up to 30mm deep.
- Universal - suitable for wall widths of 89mm and 140mm.
- Flexible - packing pieces can easily be added or removed from the base plate to achieve the required depth.
- Structural - satisfies NHBC requirements for permanent structural packing of the sole plate when installed at load points.
- Multiple holes in the bracket offer a variety of fixing options.

Product Dimensions – Bracket

References	Dimensions [mm]				Holes			
					Flange A		Flange B	
	A	B	C	t	Ø3	Ø8	Ø3	Ø8
TFLSB	90	140	80	1	16	1	25	1
TFLSB75	90	75	80	1	16	1	10	0

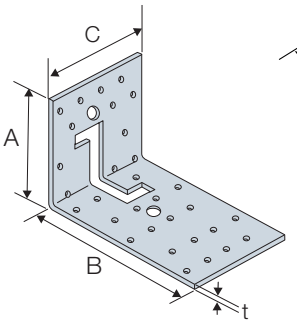

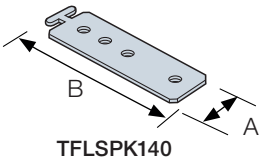

TFLSPK140

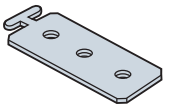

TFLSPK89

Product Dimensions – Packers

References	Dimensions [mm]			Holes
	A	B	t	Ø8
TFLSPK89	39	89	2	3
TFLSPK140	39	140	2	4

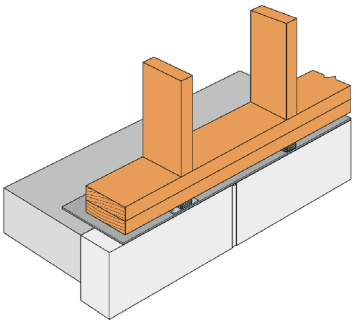

Typical TFLS installation

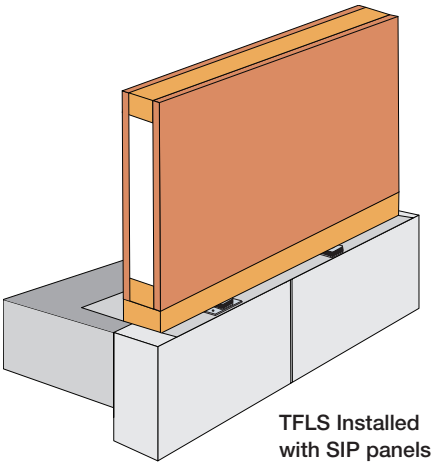

TFLS Installed with SIP panels

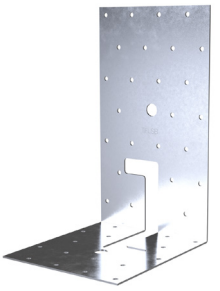

TFLSB

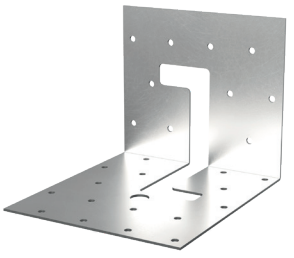

TFLSB75

Please Note:

- The TFLS is laid on top of the damp proof course.
- Fixing of the TFLS bracket to the foundation and the sole plate shall be in accordance with the engineer's instructions.
- If the TFLS bracket and/or packers are installed at every load point then it is not necessary to fill the void between the underside of the sole plate and the foundation with structural grout (filling of void may be required to satisfy other regulations or requirements, i.e. Part L and Part E regulations).

C-C-UK-2023 ©2023 SIMPSON STRONG-TIE COMPANY INC.

TFLS Levelling System

Standard Installation.

Starting at the highest point of the foundation slab, position and install the TFLS bracket, including one packer underneath the sole plate.

Position and install a second TFLS bracket at one end of the sole plate and level to the first by adding packers to the second TFLS bracket. If necessary, install a third TFLS at the other end of the sole plate and level to the first.

Infill between TFLS brackets with additional brackets. Level by adding packers as necessary to each bracket. Ideally position infill brackets under load points (stud positions) at centres specified by the engineer/building designer.

Repeat process around the rest of the building. Once the ground floor walls are in situ, install packers under the load points not supported by a TFLS bracket.

Alternate Installation (aids levelling of the mortar bed).

Starting at the highest point of the foundation slab, position and install the TFLS bracket including one packer.

Position and install a second TFLS bracket at the opposite end of the foundation slab and level to the first by adding packers as necessary to the second TFLS bracket.

Infill between first and second TFLS brackets with additional brackets. Level by adding packers as necessary to each bracket.

Using the levelled TFLS as a guide, mortar between the brackets to produce a level base for the sole plate to sit on - ensuring the mortar bed is the full width of the sole plate.

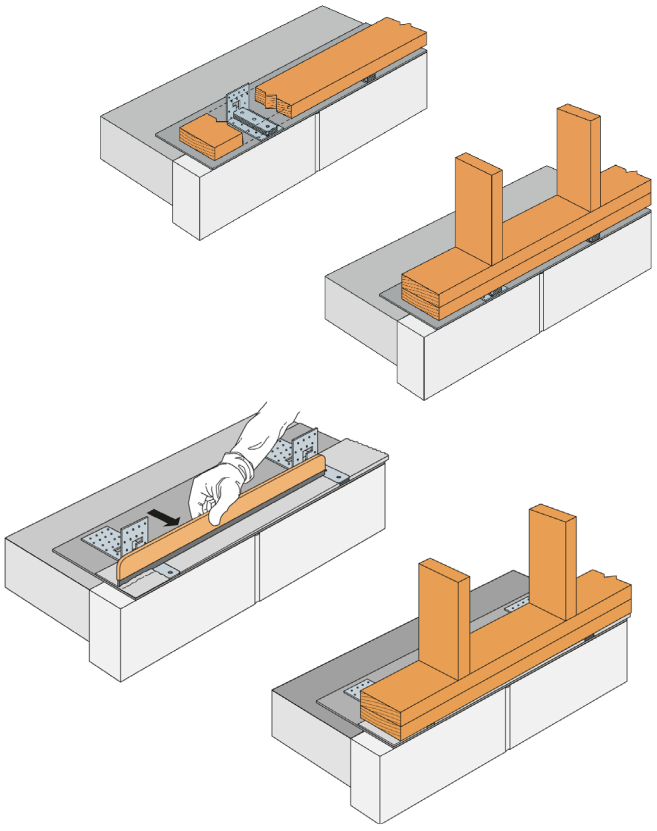

SPA Sole Plate Anchor

The SPA is a versatile bracket used to attach timber sole plates to concrete foundations.

Installation:

- Fasteners can be located where suitable.
- The SPA is laid on top of the damp proof course, lined up and shotfired to the concrete base.
- The timber is then laid down and secured with nails through the upright flange of the anchor.

Material: Pre-galvanised mild steel.

Product Dimensions

References	Dimensions [mm]				Holes Flange A	Holes Flange B
	A	B	C	t	Ø3	Ø3
SPA38	37	191	83	1	8	28
SPA50	52	177	83	1	8	28

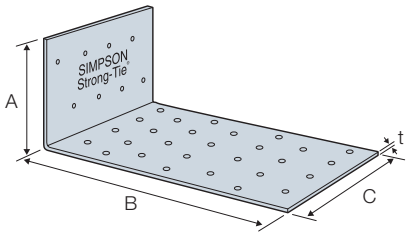

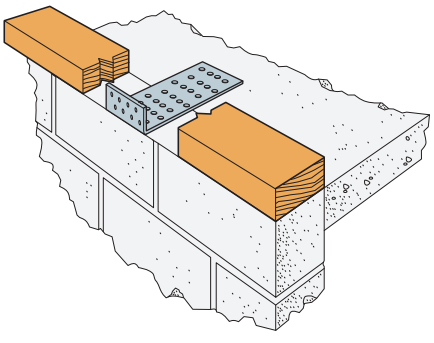

C-C-UK-2023 ©2023 SIMPSON STRONG-TIE COMPANY INC.

ETFSS Hold Down Strap

The ETFSS hold down strap provides restraint against uplift to timber frame structures keeping them firmly to the ground.

- Quick and simple to install.
- One size strap suits cavities from 50 to 100mm.
- Meets NHBC Technical requirements.
- Meets NSAI Technical requirements.

Material: Stainless steel.

Installation: Use all specified fasteners. Verify that the header can take the required fasteners specified in the table.

Note: Use 3.35x50mm stainless steel annular ring shank nails.
Product code NSS3.35x50. Order separately.

SSRSN RECOMMENDED FIXINGS

Product Dimensions & Performance Values

References	Dimensions [mm]					Holes		
						Flange A	Flange B	
	A	B	C	D	t	Ø4.6 Pan	Ø4.1	Triangular
ETFSS	75	723	33	380	1.2	2	6	2
ETFSS06	75	533	33	380	1.2	2	4	-

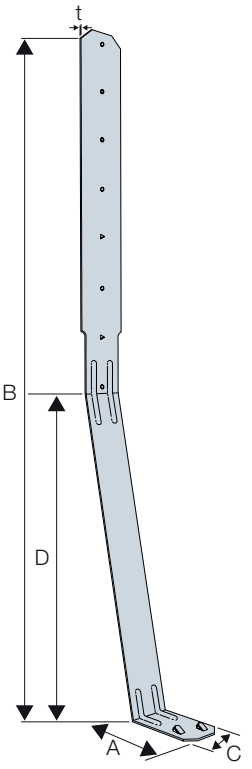

Performance Values

References	Cavity [mm]	Fasteners	Safe Working Load [kN]	Characteristic Load [kN]
			$R_{2,SWL,Short\ Term}$	$R_{2,k}$
			NSS3.35x50	NSS3.35x50
ETFSS	50	6	3.0	6.3
	51-100	8	1.5	3.2
ETFSS06	50	4	2.7	5.4
	51-100	4	1.4	2.9

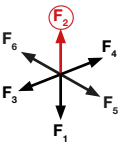

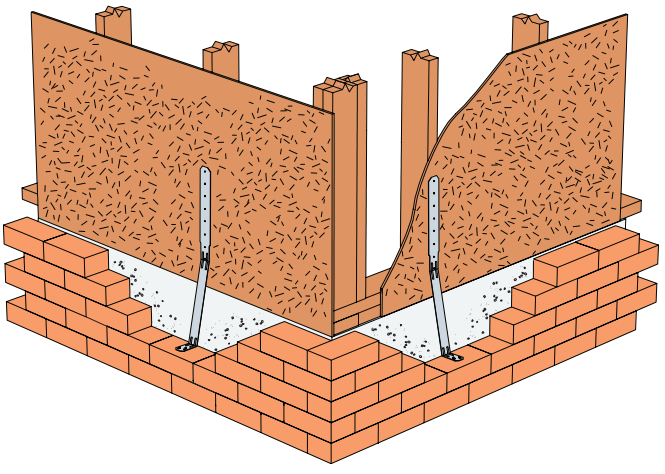

Standard ETFSS Installation
Location and spacing of straps to be specified by the building designer.

C-C-UK-2023 ©2023 SIMPSON STRONG-TIE COMPANY INC.

IC Insulation Clip

The IC insulation clip provides a quick and simple method of retaining rigid insulation within a timber frame panel, creating a controlled gap for services. The IC saves time by allowing the insulation to be installed from the same side as the sheathing, which elminates the need to turn the panel during construction. Since it fixes to the stud via the speed prong feature - no nailing is required.

- Sizes to suit common stud widths.
- Multiple depths to suit common thickness of rigid insulation.
- Insulation installed same side as the sheathing - panel no longer needs to be turned during construction.
- No nails required, speed prong feature fixes into the stud.
- Split into two halves for single use around door and window openings, cripple studs and panel end studs.

Material: Pre-galvanised mild steel.

Installation:

1. Make up the timber frame panel with the top and bottom rails and studs.
2. Position IC clip on the studs and fix.
3. Cut rigid insulation to size and push fit between the studs.
4. Fix sheathing board onto the panel.

Product Dimensions

References	Dimensions [mm]			
	A	B	C	t
IC71/38	38	71	18	0.55
IC81/38	38	81	18	0.55
IC91/38	38	91	18	0.55
IC101/38	38	101	18	0.55
IC106/38	38	106	18	0.55
IC111/38	38	111	18	0.55
IC121/38	38	121	18	0.55
IC136/38	38	136	18	0.55
IC165/38	38	165	18	0.55
IC176/38	38	176	18	0.55
IC71/45	45	71	18	0.55
IC91/45	45	91	18	0.55
IC101/45	45	101	18	0.55
IC106/45	45	106	18	0.55
IC111/45	45	111	18	0.55
IC121/45	45	121	18	0.55
IC165/45	45	165	18	0.55
IC176/45	45	176	18	0.55

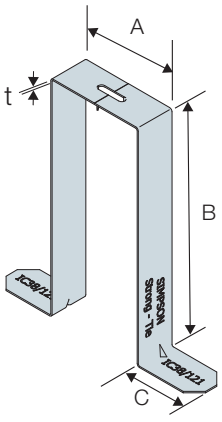

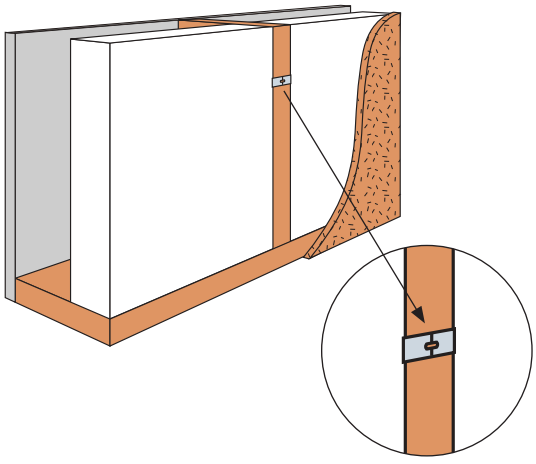

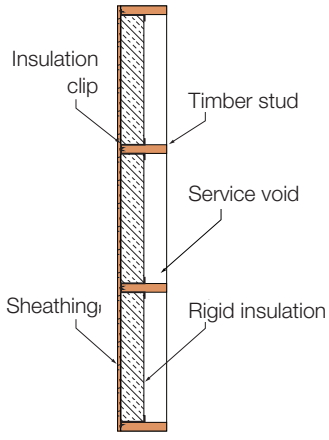

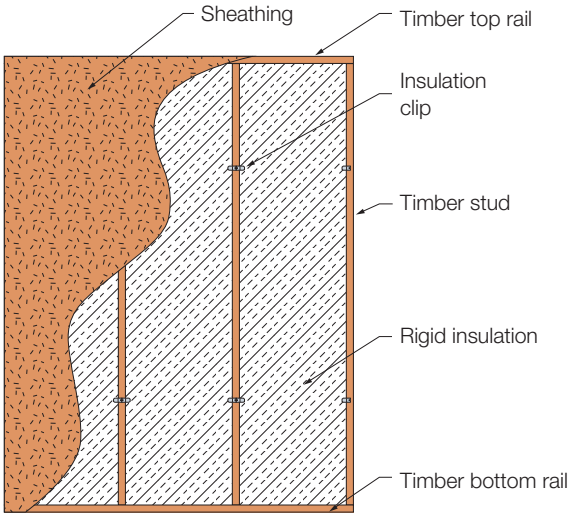

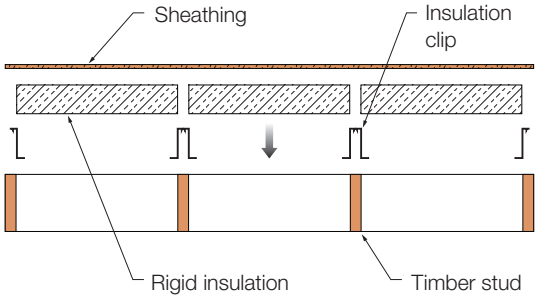

C-C-UK-2023 ©2023 SIMPSON STRONG-TIE COMPANY INC.

TFPC Timber Frame Panel Closer

The TFPC timber frame panel closer is used to draw timber frame panels together. It helps minimise air leakage at the point between the timber frame panels and avoids damage to the OSB sheathing when using screws alone.

It can be used for inline panel to panel connections, timber frame corner connections and timber frame panel to sole plate connections. The unique patented screw guide ensures that the fastening is driven quickly and accurately.

- Screw guide ensures fast, accurate installation.
- Simple method of joining panels and reducing air leakage without damaging the exterior substrate.
- Screw thread design clinches the panels firmly together.
- For panel to panel or panel to sole plate connections.
- All fasteners supplied.

Material: Pre-galvanised mild steel.

SDW RECOMMENDED FIXINGS

STN RECOMMENDED FIXINGS

Product Dimensions

References	Dimensions [mm]				Holes		
					Flange A	Flange B	
	A	B	C	t	Ø10	Ø5	Ø8x14 Obround
TFPC	21	54	50	2.5	1	2	1

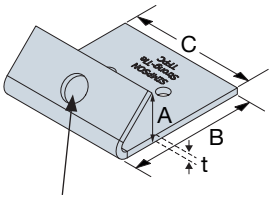

Screw Guide ensures 45° driven angle.

Performance Values

References	Fastener Qty		Characteristic Capacities [kN]		
	Flange A	Flange B	$R_{1,k,\ Shear}$	$R_{2,k\ -\ Uplift}$	$R_{3,k,\ Lateral}$
	SDW22458	N3.75x30			
TFPC	1	2	3.0	1.9	1.3

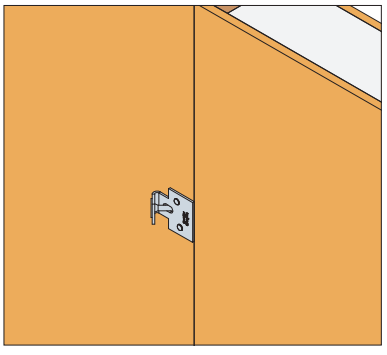

Panel to Panel Installation

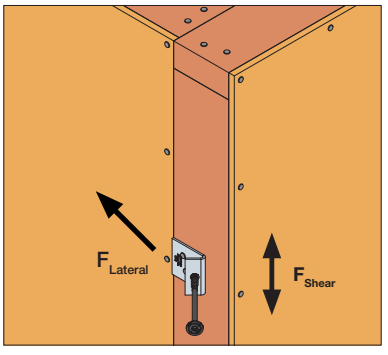

Panel to Panel Corner Installation

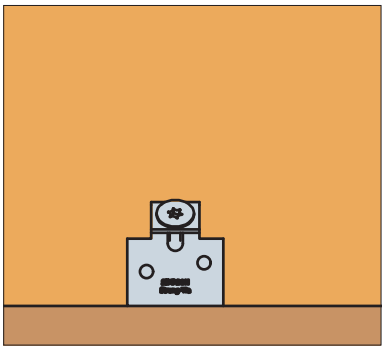

Panel to Sole Plate Installation

C-C-UK-2023 ©2023 SIMPSON STRONG-TIE COMPANY INC.

TFPC Timber Frame Panel Closer

Panel-to-Panel Installation:

Securely fix the first panel in place (propping if necessary). Position the second panel in line with the first and apply mastic to the vertical stud (if required). Connect the panels using the TFPC as follows:

1. Use 4 x TFPC per 2.4m vertical panel joint, starting with 300mm from the base, then 600mm centres.
2. Position the TFPC panel closer so that the edge of the TFPC is in line with the centre of the timber frame panel.
3. Fix the TFPC to the timber frame panel using the 2 No 3.75x30mm square twist nails (included).
4. Insert the SDW22458 structural screw into the panel closer, maintaining an angle of 45° to close the gap between the panels.
5. Fold the breather membrane over the TFPC and fix in place.
6. It is recommended to fit the bottom TFPC first, then the top one, followed by the two in the middle.

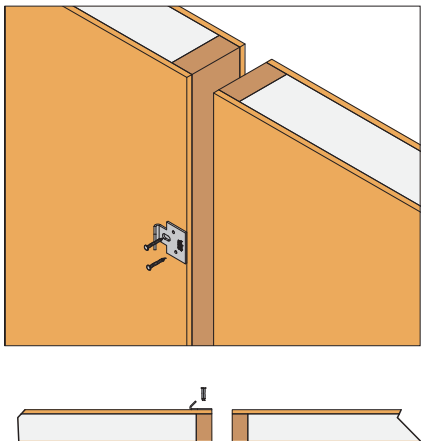

Install Nails

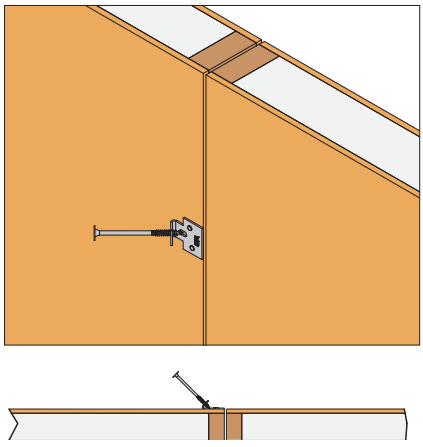

Install SDW Screw

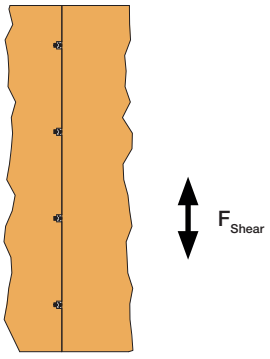

4 x TFPC per 2.4m Panel

Panel-to-Sole Plate Installation:

1. Use 1 x TFPC at 600mm centres horizontally or as specified by the structural engineer.
2. Position the TFPC panel closer so that the bottom edge of the TFPC is in line with the bottom edge of the timber frame panel.
3. Fix the TFPC to the timber panel using 2 No 3.75x30mm square twist nails (supplied).
4. Insert the SDW22458 structural screw into the panel closer, maintaining an angle of 45°, to fix the timber panel to the sole plate.

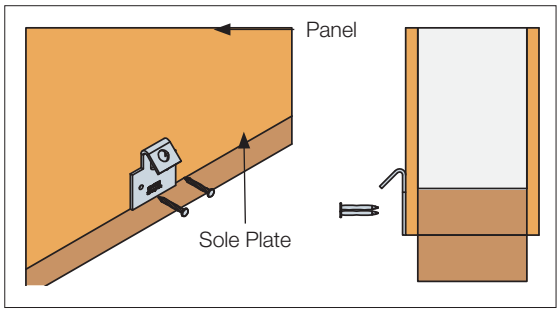

Install Two Nails

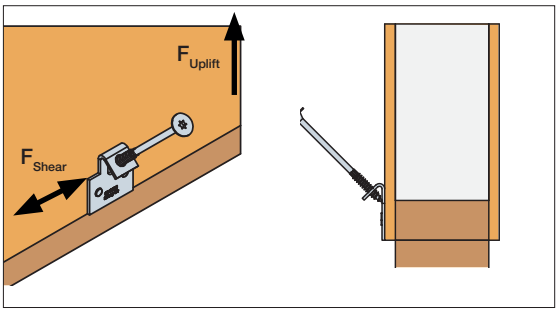

Install SDW Screw

Corner Panel Installation:

Securely fix the first panel in place (propping if necessary). Position panels A & B together to create the corner and apply mastic to the vertical stud (if required). Connect the panels using the TFPC as follows:

1. Use 4 x TFPC per 2.4m vertical panel joint, starting with 300mm from the base, then 600mm centres.
2. Position the TFPC panel closer so that the edge of the TFPC is in line with the back of the exposed CLS of panel A.
3. Fix the TFPC to the timber frame panel using the 2 No 3.75x30mm square twist nails (included).
4. Insert the SDW22458 structural screw into the panel closer, maintaining an angle of 45° to close the gap between the panels.
5. Fold the breather membrane over the TFPC and fix in place.
6. It is recommended to fit the bottom TFPC first, then the top one, followed by the two in the middle.

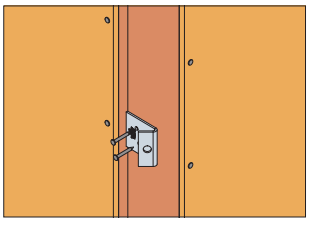

Install 2 nails

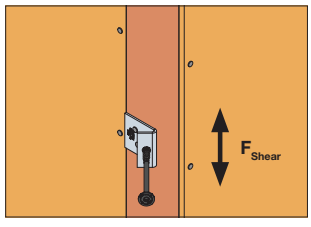

Move the panels into position, and install the SDW22458 screw

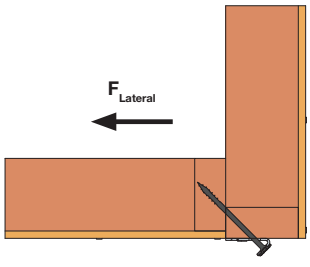

C-C-UK-2023 ©2023 SIMPSON STRONG-TIE COMPANY INC.

PWT/SPWT Party Wall Tie

The PWT200 and SPWT are specifically designed and engineered to connect the party walls of timber frame buildings.

The PWT200 is to be used where the tops of party walls are level, whilst the SPWT is to be used for "stepped" party wall applications.

PWT200 and SPWT design ensures minimum material section for optimum sound performance.

- Meets the requirements of Part E of The Building Regulations (Resistance to the Passage of Sound).
- Suits timber frame party wall cavities from 50 to 75mm.
- Can be used on Closed Panel Construction – where 50mm stiffening rib helps to check that minimum 50mm cavity width has been achieved.

Material: Pre-galvanised mild steel.

Installation:

- Quick and easy installation.
- Nail holes positioned to ensure minimum nail edge distances are always achieved.
- In order to minimise the risk of sound transfer, it is recommended that the PWT and SPWT are installed at 1200mm centres, unless otherwise specified by the building designer or engineer.
- PWT is to be installed at, or near ceiling level, whilst the SPWT is to be installed onto the face of one wall and on top of the top rail of the adjacent wall. SSH fixing for SPWT must be installed into vertical stud.

STN RECOMMENDED FIXINGS

Product Dimensions

References	Dimensions [mm]				Holes	
	A	B	C	t	Ø6.2	Ø4.1
PWT200	25	200	-	1.5	-	8
SPWT	25	140	25	1.5	1	4

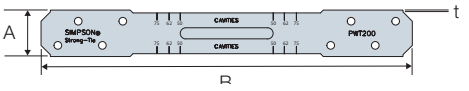

PWT

Performance Values

References	Fasteners				Characteristic Loads [kN]	Safe Working Load [kN]
	Flange A		Flange C			
	Qty	Type	Qty	Type	$R_{3\&4,k}$	$R_{3\&4,\ SWL,\ Long\ Term}$
PWT200	8	N3.75x30	-	-	2.6	1.8
SPWT	4	N3.75x30	1	SSH6.0x60		

Note: SSH6.0x60 supplied with SPWT

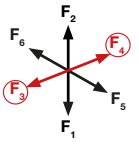

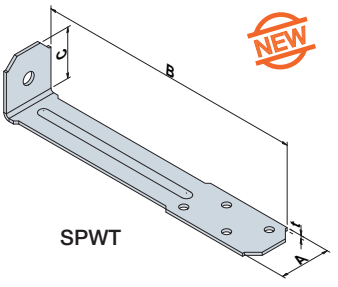

SPWT

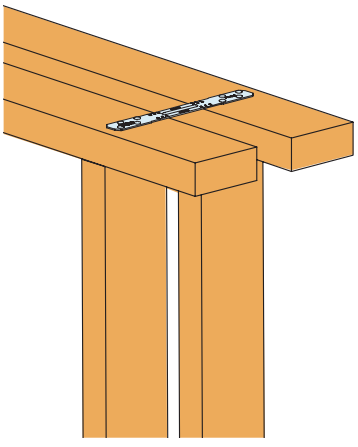

Typical PWT Installation

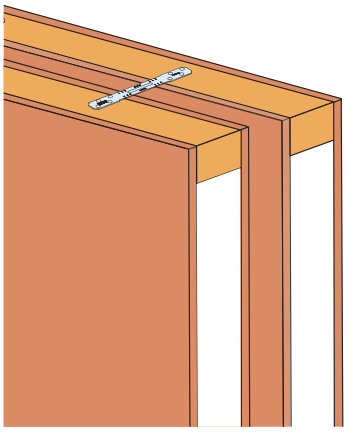

PWT Installed on SIP

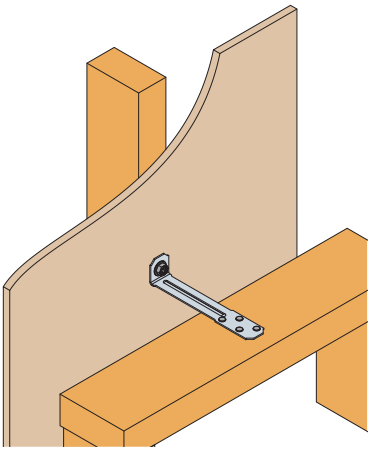

Typical SPWT Installation

C-C-UK-2023 ©2023 SIMPSON STRONG-TIE COMPANY INC.

HTT Hold Down

NEW

Ideal for existing or new construction, HTT tension ties provide a high strength timber to concrete, or timber to masonry, tension connection.

The long vertical leg makes it possible to add the required number of fasteners (CNA Nails and CSA Screws) in a vertical post and still comply to relevant standards with regards to fastener spacing requirements.

The unique design of the HTT - a multi ply seat formed from a single piece of steel - gives the tension tie extra strength at the concrete/masonry anchorage point.

Material: Pre-galvanised mild steel.

Product Dimensions

References	Dimensions [mm]								Holes Flange A [mm]				Holes Flange B [mm]		
	A	B	C	D	E	F	G	t	Ø4.7	Ø5	Slots Ø5x12	Ø21	Ø17.5	Ø18	Ø26
HTT4	314	60	64	11.4	35	-	-	2.8	18	-	-	-	1	-	-
HTT5	403	56	64	11.4	35	-	-	2.8	26	-	-	-	1	-	-
HTT31	785	60	90	12	33	80	340	3.0	-	41	4	6	-	-	1

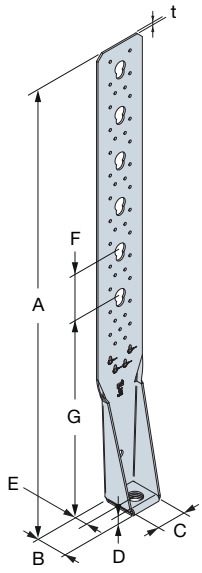

HTT31

Product Simplified Characteristic Capacities – Minimum Nailing

References	Fasteners				Characteristic Values - C24 Timber on Concrete [kN]						
	Flange A		Flange B		$R_{2,k}$ (excluding US50/50/8 Washer)				$R_{2,k}$ (with US50/50/8 Washer)		
	Qty	Type	Qty	Anchor	CNA 4.0x40	CNA 4.0x50	CNA 4.0x60	CSA 5.0x50	CNA 4.0x40	CNA 4.0x50	CNA 4.0x60
HTT4	18	CNA	1	M16	18.6	24.7	31.0	-	23.9	31.7	34.2
HTT5	18	CNA	1	M16	18.6	24.7	31.0	-	23.9	31.7	34.2
HTT31	39	CNA / CSA	1	M24	64.1	77.4	77.4	77.4	-	-	-

Characteristic values assume Service class 2 with K_{mod} = 1.1.
For HTT31, fasteners must always be installed at the bottom of the obround holes for above stated performance values to apply. The engineer or designer shall be responsible for specifying suitable anchor type, embedment & configuration

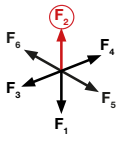

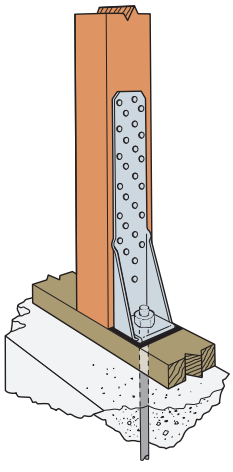

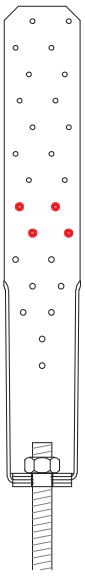

For HTT5 these holes must always be filled

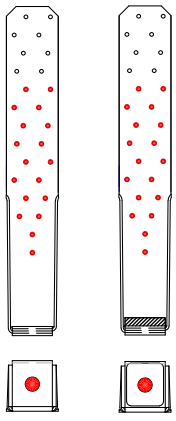

without a washer | with a washer

HTT5
(HTT4 Similar)

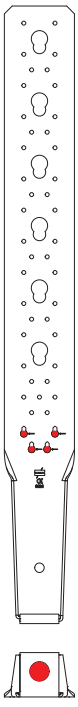

Always CSA in these 4 holes.

HTT31

C-C-UK-2023 ©2023 SIMPSON STRONG-TIE COMPANY INC.

A34E/A35E Framing Anchors

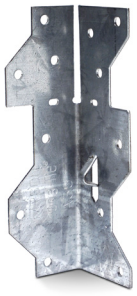

A35E

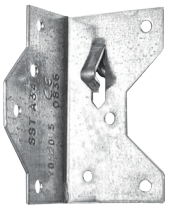

A34E

The A35E anchor's exclusive bending slot allows instant, accurate bending on site for all two and three-way connections.

- Balanced, completely reversible design allows the A35E to be used to secure a wide variety of connections.

Material: Pre-galvanised mild steel.

Installation: Use all the specified fasteners.

Product Dimensions

References	Dimensions [mm]				Holes	
					Flange A [mm]	Flange B [mm]
	A	B	C	t	Ø4.1	Ø4.1
A34E	33	33	64	1.2	4	4
A35E	33	33	114	1.2	6	6

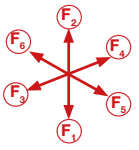

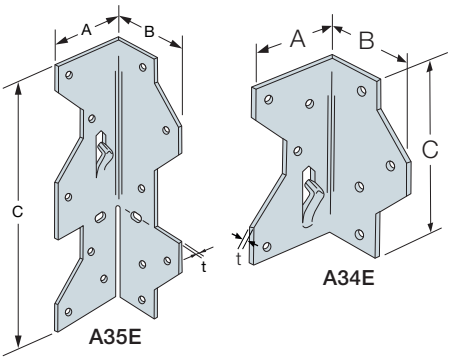

Performance Values

References	Fasteners		Installation	Safe Working Loads [kN] – Timber C16												Characteristic Capacities [kN](1) Per Pair of Connectors C24 Timber
	Flange A	Flange B		Long term						Medium Term						
	N3.75x30	N3.75x30		$R_{1,SWL}$	$R_{2,SWL}$	$R_{3,SWL}$	$R_{4,SWL}$	$R_{5,SWL}$	$R_{6,SWL}$	$R_{1,SWL}$	$R_{2,SWL}$	$R_{3,SWL}$	$R_{4,SWL}$	$R_{5,SWL}$	$R_{6,SWL}$	$R_{2,k}$
A34E	4	4	1	1.3	1.3	-	1.1	-	-	1.5	1.5	-	1.2	-	-	-
A35E	6	6	2	1.3	1.3	-	1.5	-	-	1.5	1.3	-	1.7	-	-	-
A35E	6	3	3	-	1.0	-	-	0.6	1.0	-	1.1	-	-	0.7	1.1	5.3
A35E	6	6	4	-	1.0	1.0	0.6	-	-	-	1.1	1.1	0.7	-	-	5.3

(1) Based upon 2 No brackets installed diagonally opposite to each other

Some illustrations show connections that would cause cross grain tension or bending of the wood during loading if not reinforced sufficiently. In which case, consider mechanical reinforcement.

When framing anchors are installed on each side of the joist, the minimum thickness is 47mm.

Framing anchors must be installed diagonally opposite each other for the higher characteristic capacities to be applicable.

Type of connections

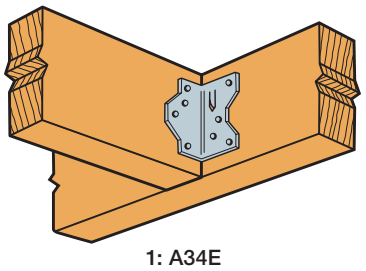

1: A34E

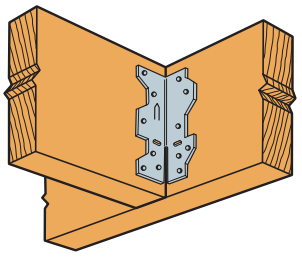

2: A35E

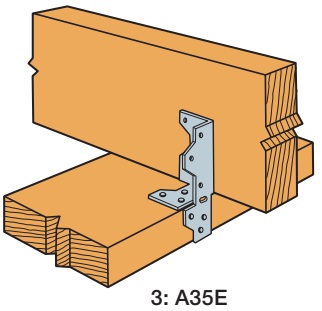

3: A35E

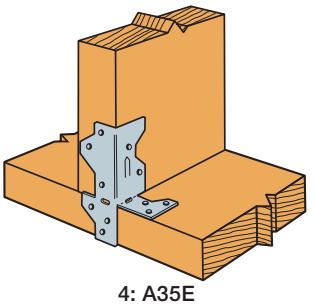

4: A35E

C-C-UK-2023 ©2023 SIMPSON STRONG-TIE COMPANY INC.

A34E/A35E Framing Anchors

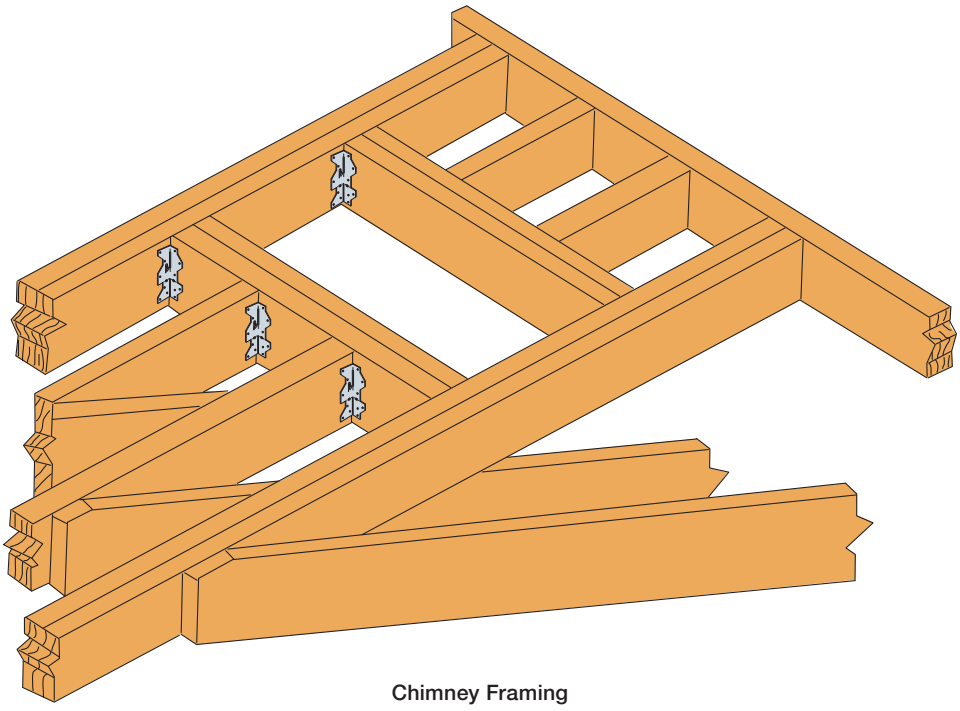

Chimney Framing

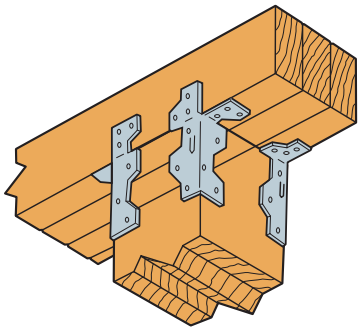

Beam to Posts
A and B Legs Outside

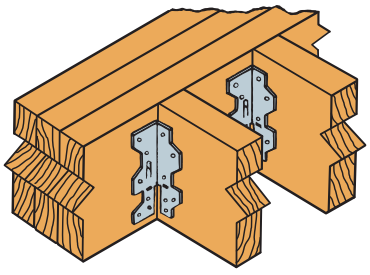

Ceiling Joist
To Beam

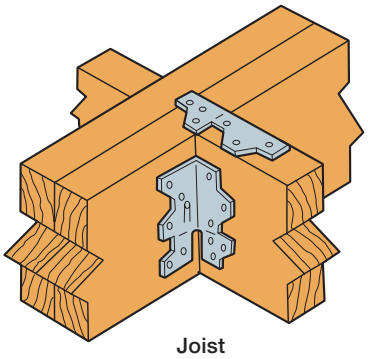

Joist
To Beam

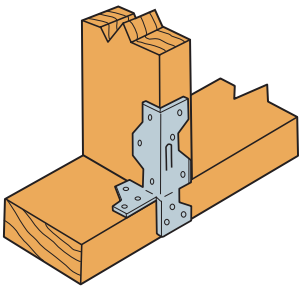

Stud to Plate
with B Leg Outside

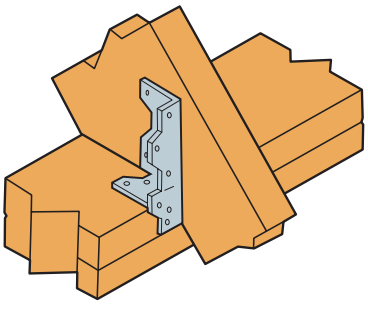

Joist to Plate
with A Leg Inside

C-C-UK-2023 ©2023 SIMPSON STRONG-TIE COMPANY INC.

A Angles

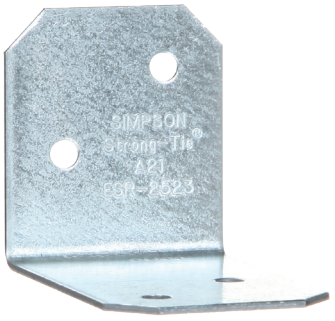

A21

The 'A' angle's versatility means it can be used in many applications requiring 90° fixing.

Material: Pre-galvanised mild steel.

Product Dimensions

References	Dimensions [mm]				Holes	
					Flange A	Flange B
	A	B	C	t	Ø4.3	Ø4.3
A21	38	50	35	1.2	2	2
A23	38	50	70	1.2	4	4

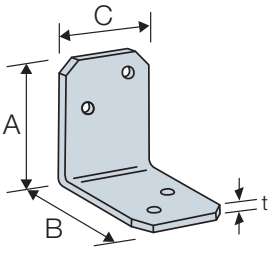

Performance Values

References	Number of Fasteners		Safe Working Loads [kN]	
	Onto Post	Onto Beam		
	N3.75x30	N3.75x30	$R_{5,SWL,Long\ Term}$	$R_3 = R_{4,SWL,Long\ Term}$
A21	2	2	0.6	0.5
A23	4	4	1.2	1.2

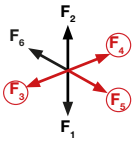

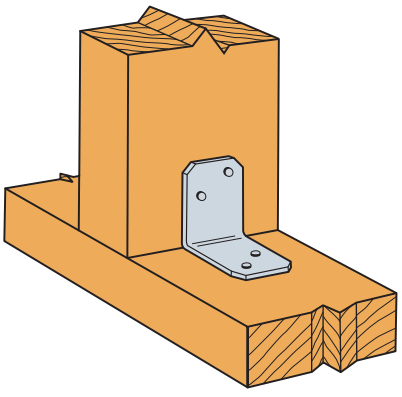

A21

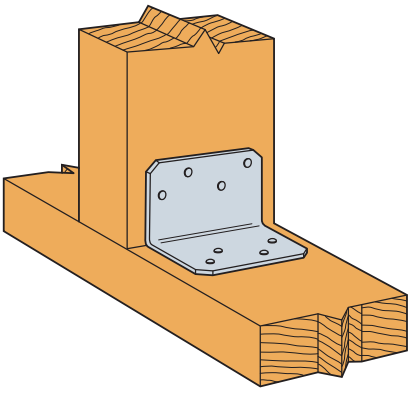

A23

C-C-UK-2023 ©2023 SIMPSON STRONG-TIE COMPANY INC.

Technical Information - Angle Brackets and Ties

Characteristic Values

The characteristic values (F_k) have been determined in accordance with Eurocode 5 and ETAG 015, which are defined by the relevant European Technical Approval. The design values are obtained from the following formula:

$$F_{design} = \frac{F_k \times k_{mod}}{\gamma m}$$

Where: K_{mod}: modification factor, dependent on the service class, the duration of load and the type of material used.
γm: partial safety factor.

Load Application

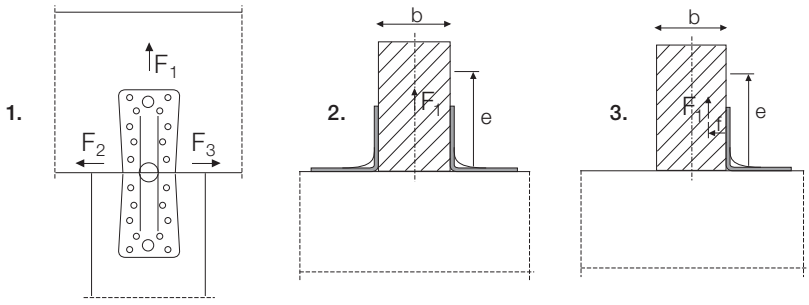

1. Beam or rigid support.
2. 2 brackets per assembly.
3. 1 bracket per assembly.

F_1 - Tensile Force

When application is with 2 brackets the tensile force occurs in the central axis of the joint.

When application is with 1 bracket only:

If the structure prevents rotation or failure of the supported member, the tensile resistance is equal to half of the value for 2 brackets - otherwise:

The tensile resistance of the assembly depends on the distance << f >> between the vertical contact surface and the point of load application.

F_2 & F_3 - Lateral Force:

When application is with 1 bracket only: the value of resistance is equal to half of that given for two brackets.

Combined Loads

In cases of combined loads, the following check shall be verified: F_2 and F_3 are opposing forces.

$$F_1 + F_2 + F_3 : \quad \left(\frac{F_{1,d}}{R_{1,d}}\right)^2 + \left(\frac{F_{2,d}}{R_{2,d}}\right)^2 + \left(\frac{F_{3,d}}{R_{3,d}}\right)^2 \leq 1$$

Type of Application

The characteristic values published are dependent on the type of application and material to which they are fixed.
There are three main categories as shown below.

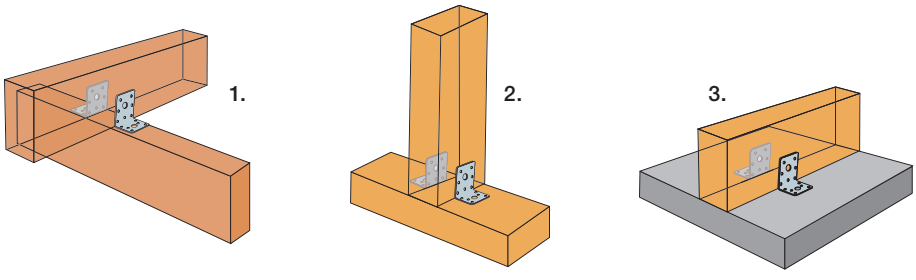

1. **Fixing -** Timber/Timber
   e.g. Beam/Beam
2. **Fixing -** Timber/Timber
   e.g. Post/Beam
3. **Fixing -** Timber/Concrete
   e.g. Beam/Rigid Support

For each of these types of application, full nailing conditions apply, ie. every nail hole is filled. The above is only valid if the application is in accordance with the diagrams shown above. All units are in kilo Newtons [kN].

Timber Strength Class

The values correspond to the use of timber class C24 for structural applications.
For a higher grade of timber the tabulated values remain unchanged.
For a lower class of timber the tabulated values should be factored down with the kdens coefficient as shown:

$$K_{dens} = \left(\frac{\rho_k}{350}\right)^2$$

Where ρ_k = Characteristic density of timber used in accordance with BS EN 338.
350 = Characteristic density of timber class C24 in accordance with BS EN 338.

C-C-UK-2023 ©2023 SIMPSON STRONG-TIE COMPANY INC.

ABR/AE/E Reinforced Angle Brackets

ABR105

ABR9020

ABR100

AE76

E2/2.5/7090

E9S/2.5

Heavy angles for general connecting of timber at 90° angles. Reinforced ribs add extra rigidity. Brackets vary in terms of holes/slots to allow for the use of different nails or screws.

Typical application include fixing trusses, purlins and posts. Suitable support materials include solid timber, composite timber, laminated timber and trusses.

Material: Pre-galvanised mild steel (except ABR10525S & ABR9020S: stainless steel).

Product Dimensions

References	Dimensions [mm]				Holes												
					Flange A							Flange B					
	A	B	C	t	Ø5	Ø8.5	Ø11	Ø12	Ø13	Ø14	Obround	Ø5	Ø8.5	Ø11	Ø12	Ø13	Ø14
ABR70	70	70	55	2.0	6	1	-		-	-	-	6	1	-		-	-
ABR9020	88	88	65	2.0	10	-	1		-	-	-	10	-	-		1	-
SS ABR9020S	88	88	65	2.0	10	-	1		-	-	-	10	-	-		1	-
ABR100	103	103	90	2.0	10	-	-	1	-	-	1 x Ø12x32	14	-	-	1	-	-
ABR10525	105	105	90	2.5	10	-	2		-	1	-	14	-	-		-	1
SS ABR10525S	105	105	90	2.5	10	-	2		-	1	-	14	-	-		-	1
ABR98	98	98	88	3.0	10	-	-	-	3	-	-	12	-	-	-	3	-
ABR105	105	105	90	3.0	10	-	3	-	-	-	-	14	-	1	-	-	-

References	Dimensions [mm]				Holes			
					Flange A		Flange B	
	A	B	C	t	Ø5	Ø13	Ø5	Ø13
AE76-R	90	48	76	3.0	12	3	7	1

References	Dimensions [mm]				Holes						
					Flange A				Flange B		
	A	B	C	t	Ø5	Ø11	Ø13	Obround	Ø5	Ø11	Obround
E5/2C50	75	48	65	2.0	7	-	-	1 x Ø11x22	6	-	1 x Ø11x22
E2/2.5/7090	90	90	65	2.5	10	1	-	-	10	1	-
E4/2.5	100	60	75	2.5	8	-	1	-	6	-	1 x Ø12x20
E9S/2.5	150	90	65	2.5	14	1	-	1 x Ø11x33.5	8	1	-
E9/2.5	150	150	65	2.5	14	1	-	1 x Ø11x33.5	14	1	-

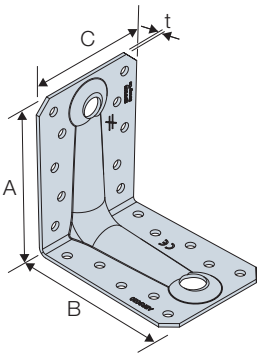

ABR9020

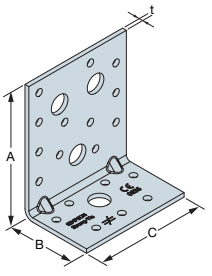

AE76

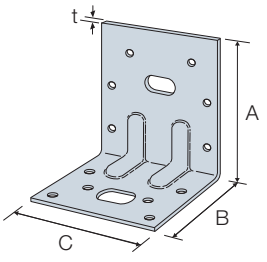

E5/2C50

C-C-UK-2023 ©2023 SIMPSON STRONG-TIE COMPANY INC.

ABR/AE/E Reinforced Angle Brackets

Connection with Timber/Timber type Beam/Beam: 2 Brackets

	References	Fasteners		Characteristic Values [kN]			
				$R_{1,k}$		$R_{2,k} = R_{3,k}$	
		Flange A	Flange B	CNA4.0x35	CNA4.0x50	CNA4.0x35	CNA4.0x50
	ABR70	6	6	4.4	7.1	4.4	6.8
	ABR105	10	14	8.9	14.3	13.6	19.1
	ABR100	10	14	9.7	15.7	9.6	14.2
	ABR9020	10	10	9.7	11.9	9.4	12.2
SS	ABR9020S(*)	10	10	9.7	11.9	9.4	12.2
	ABR98	10	12	9.8	15.7	12.1	17.5
	ABR10525	10	14	12.7	23.6	10.8	18.5
SS	ABR10525S(*)	10	14	12.7	23.6	10.8	18.5

* Stainless steel fixings should be used (e.g. CNA4.0x35S)

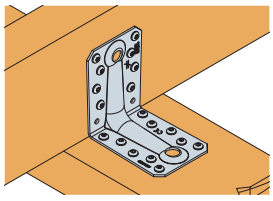

ABR9020

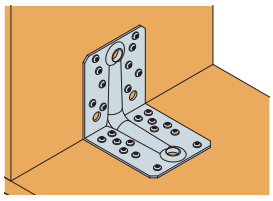

ABR10525
(CLT Application: Wall to Floor)

References	Fasteners		Characteristic Values [kN]			
			$R_{1,k}$		$R_{2,k} = R_{3,k}$	
	Flange A	Flange B	CNA4.0x35	CNA4.0x50	CNA4.0x35	CNA4.0x50
AE76-R	12	7	4.9	7.9	10.7	16.3

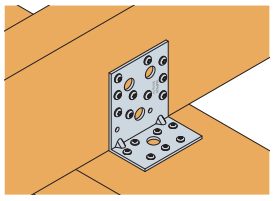

AE76

References	Fasteners		Characteristic Values [kN]			
			$R_{1,k}$		$R_{2,k} = R_{3,k}$	
	Flange A	Flange B	CNA4.0x35	CNA4.0x50	CNA4.0x35	CNA4.0x50
E9S/2.5	14	8	4.7	7.7	8.7	11.9
E9/2.5	14	14	4.9	8.2	9.3	13.0
E4/2.5	8	6	5.6	7.2	7.6	10.2
E5/2C50	7	6	6.1	8.6	9.8	13.0
E2/2.5/7090	10	10	6.6	10.6	7.6	10.5

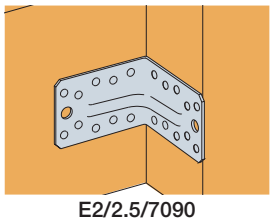

E2/2.5/7090

Connection with Timber/Timber type Post/Beam: 2 Brackets

References	Fasteners		Characteristic Values [kN]			
			$R_{1,k}$		$R_{2,k} = R_{3,k}$	
	Flange A	Flange B	CNA4.0x35	CNA4.0x50	CNA4.0x35	CNA4.0x50
E9S/2.5	14	8	2.8	4.8	7.1	9.8
E9/2.5	14	14	3.1	5.1	6.7	9.6

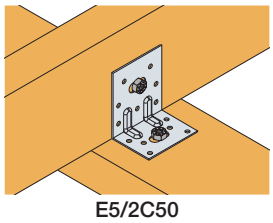

E5/2C50

Connection with Timber/Concrete Suppport type Beam/Rigid Support: 2 Brackets

References	Fastneres		Characteristic Values [kN]			
			$R_{1,k}$		$R_{2,k} = R_{3,k}$	
	Flange A	Flange B	CNA4.0x35	CNA4.0x50	CNA4.0x35	CNA4.0x50
E5/2C50	7	1 x M10	8.4	8.4	-	-
E4/2.5	8	1 x M10	12.6	12.6	-	-
E9S/2.5	12	1 x M12	12.7	16.8	6.9	11.1

Note: Refer to Technical Information – Angle brackets and ties page, for information on force directions.

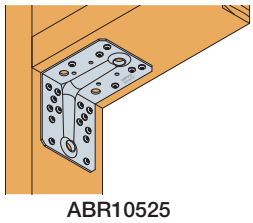

ABR10525
(Post to Beam)

C-C-UK-2023 ©2023 SIMPSON STRONG-TIE COMPANY INC.

ABR255 Structural Angle Bracket

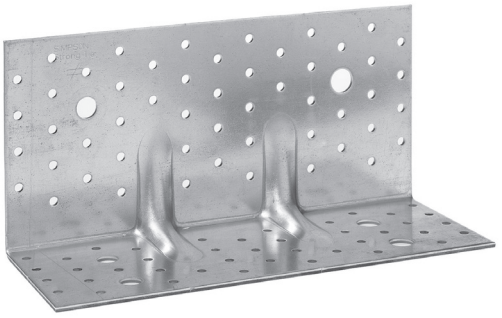

ABR255

These brackets have been especially developed for fixing CLT panels to timber or concrete. These highly versatile brackets are particularly resistant to shear loads due to their enhanced geometrical design.

Material: Pre-galvanised mild steel.

Advantages:

- Highly versatile
- Superior performance for forces in horizontal (F_2/F_3) and vertical directions (F_1)

Product Dimensions

References	Dimensions [mm]				Holes flange A		Holes flange B	
	A	B	C	t	Ø5	Ø14	Ø5	Ø14
ABR255	120	100	255	3.0	52	2	41	4
ABR255SO	200	100	255	3.0	56	2	-	4

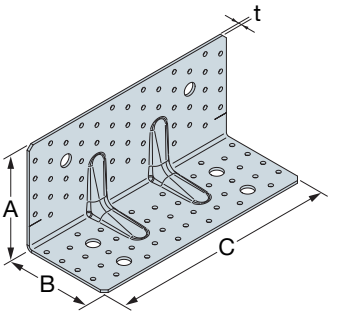

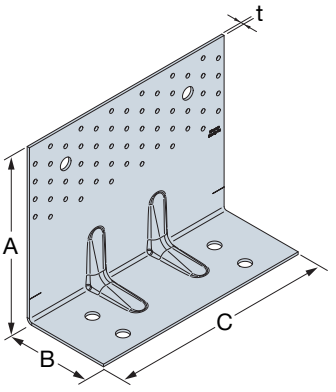

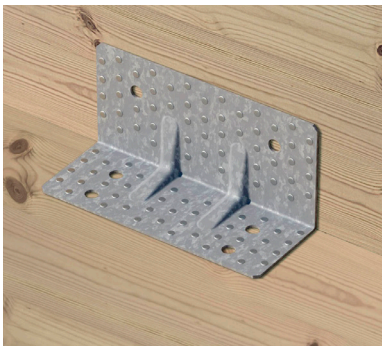

ABR255
Timber to timber
Full nailing

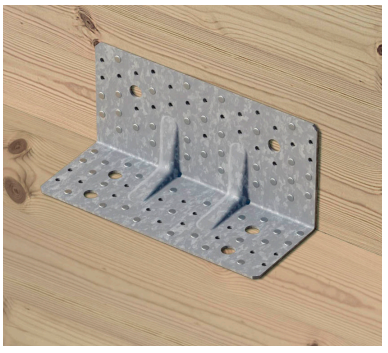

ABR255
Timber to timber
Partial nailing

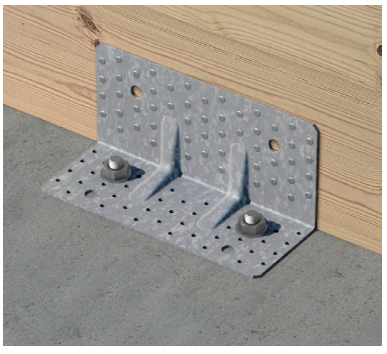

ABR255
Timber to concrete
Full nailing

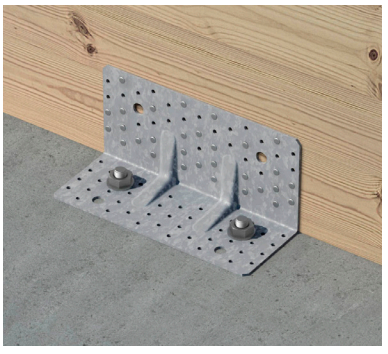

ABR255
Timber to concrete
Partial nailing

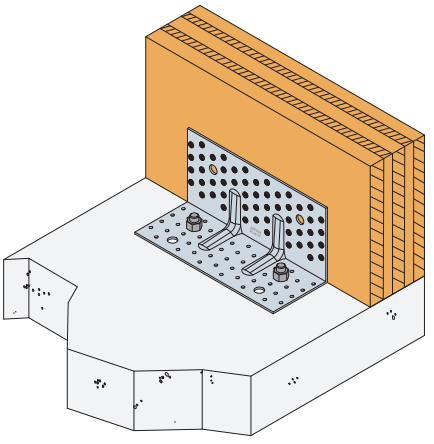

C-C-UK-2023 ©2023 SIMPSON STRONG-TIE COMPANY INC.

ABR255 Structural Angle Bracket

Product capacities – Timber to timber – Full nailing - Nailing Pattern 1

References	Fasteners		Characteristic capacities - Timber C24 - 1 angle bracket per connection [kN]															
	Flange A	Flange B	$R_{1,k}$				$R_{2,k} = R_{3,k}$				$R_{4,k}$				$R_{5,k}$			
	Qty	Qty	CNA 4.0x35	CNA 4.0x40	CNA 4.0x50	CNA 4.0x60	CNA 4.0x35	CNA 4.0x40	CNA 4.0x50	CNA 4.0x60	CNA 4.0x35	CNA 4.0x40	CNA 4.0x50	CNA 4.0x60	CNA 4.0x35	CNA 4.0x40	CNA 4.0x50	CNA 4.0x60
ABR255	52	41	14.7	16.7	20.3	23.5	33.5	37	45.9	50.5	12.5	14.9	18.2	21.1	14.8	14.8	14.8	14.8

1) The values in the table above requires the panel or beam to be fixed against rotation

Product capacities – Timber to timber – Full nailing - Nailing Pattern 2

References	Fasteners		Characteristic capacities - Timber C24 - 1 angle bracket per connection [kN]															
	Flange A	Flange B	$R_{1,k}$				$R_{2,k} = R_{3,k}$				$R_{4,k}$				$R_{5,k}$			
	Qty	Qty	CNA 4.0x35	CNA 4.0x40	CNA 4.0x50	CNA 4.0x60	CNA 4.0x35	CNA 4.0x40	CNA 4.0x50	CNA 4.0x60	CNA 4.0x35	CNA 4.0x40	CNA 4.0x50	CNA 4.0x60	CNA 4.0x35	CNA 4.0x40	CNA 4.0x50	CNA 4.0x60
ABR255	30	23	12.7	14.3	17.2	20.3	27.4	30.5	38	42.1	12.2	13.8	16.9	19.5	11.5	13.6	15.4	15.4

1) The values in the table above requires the panel or beam to be fixed against rotation

Product capacities – Timber to Concrete – Full nailing – Nailing Pattern 1

References	Fasteners				Characteristic capacities - Timber C24 - 1 angle bracket per connection [kN]															
	Flange A		Flange B		$R_{1,k}$				$R_{2,k} = R_{3,k}$				$R_{4,k}$				$R_{5,k}$			
	Qty	Type	Qty	Type	CNA 4.0x35	CNA 4.0x40	CNA 4.0x50	CNA 4.0x60	CNA 4.0x35	CNA 4.0x40	CNA 4.0x50	CNA 4.0x60	CNA 4.0x35	CNA 4.0x40	CNA 4.0x50	CNA 4.0x60	CNA 4.0x35	CNA 4.0x40	CNA 4.0x50	CNA 4.0x60
ABR255	52	CNA	2	Ø12	24.4	24.4	24.4	24.4	25.1	29.2	37.7	44	19.7	19.7	19.7	19.7	17.5	19.6	19.6	19.6
ABR255SO	56	CNA	2	Ø12	20.8	20.8	20.8	20.8	29.2	32.5	38.6	-	17.1	17.1	17.1	17.1	4.6	4.6	4.6	4.6

1) The values in the table above requires the panel or beam to be fixed against rotation
2) The anchors must be checked separately using tension value of 1.1*F1, 1*F2 and 1.1*F5

Product capacities – Timber to Concrete – Partial nailing – Nailing Pattern 2

References	Fasteners				Characteristic capacities - Timber C24 - 1 angle bracket per connection [kN]															
	Flange A		Flange B		$R_{1,k}$				$R_{2,k} = R_{3,k}$				$R_{4,k}$				$R_{5,k}$			
	Qty	Type	Qty	Type	CNA 4.0x35	CNA 4.0x40	CNA 4.0x50	CNA 4.0x60	CNA 4.0x35	CNA 4.0x40	CNA 4.0x50	CNA 4.0x60	CNA 4.0x35	CNA 4.0x40	CNA 4.0x50	CNA 4.0x60	CNA 4.0x35	CNA 4.0x40	CNA 4.0x50	CNA 4.0x60
ABR255	30	CNA	2	Ø12	15.94	18.8	24.4	24.4	19.5	22.3	28.3	32.5	20.3	20.3	20.3	20.3	16.2	17.5	19.6	19.6
ABR255SO	19	CNA	2	Ø12	20.8	20.8	20.8	2.08	13.3	15.7	20.7	-	17.1	17.1	17.1	17.1	4.6	4.6	4.6	4.6

1) The values in the table above requires the panel or beam to be fixed against rotation
2) The anchors must be checked separately using tension value of 1.1*F1, 1*F2 and 1.1*F5
Note: Refer to Technical Information – Angle brackets and ties page, for information on force directions.

ABR255
Nail pattern 1

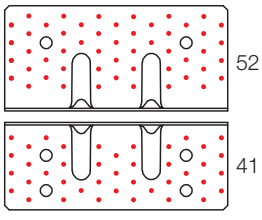

Timber to timber

ABR255
Nail pattern 2

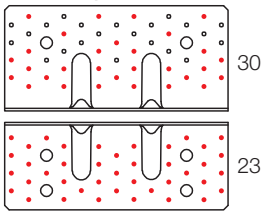

Timber to timber

ABR255
Nail pattern 1

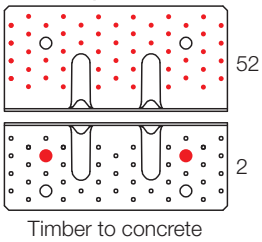

Timber to concrete

ABR255
Nail pattern 2

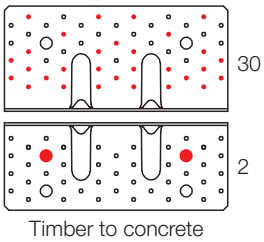

Timber to concrete

ABR255SO
Nail pattern 1

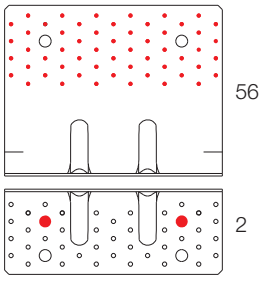

Timber to concrete
intermedia member up to 80mm

ABR255SO
Nail pattern 2

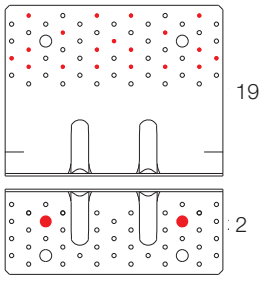

Timber to concrete
intermedia member up to 100mm

C-C-UK-2023 ©2023 SIMPSON STRONG-TIE COMPANY INC.

AB255 Structural Angle Bracket

AB255HD

AB255SSH

These brackets have been especially developed for fixing CLT panels to timber or concrete. These highly versatile brackets are particularly resistant to shear loads due to their enhanced geometrical design.

Material: Pre-galvanised mild steel.

Advantages:

- Highly versatile
- Superior performance for forces in horizontal (F_2/F_3) and vertical directions (F_1)

Product Dimensions

References	Dimensions [mm]				Holes flange A			Holes flange B			
	A	B	C	t	Ø5	Ø11	Ø14	Ø5	Ø9	Ø11	Ø14
AB255HD	123	100	255	3.0	56	-	2	41	5	-	4
AB255SSH	123	100	255	3.3	-	7	-	-	-	9	2

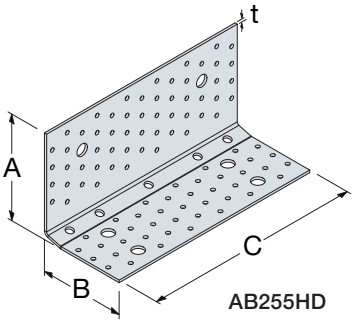

AB255HD

Product capacities – Timber to timber – Nail pattern 1

References	Fasteners						Characteristic capacities – Timber C24 – 1 angle bracket per connection [kN]											
	Flange A		Flange B				$R_{1,k}$			$R_{2,k} = R_{3,k}$			$R_{4,k}$			$R_{5,k}$		
	Qty	Type	Qty	Type	Qty	Type	CNA 4.0x50	CNA 4.0x60	CSA 5.0x50	CNA 4.0x50	CNA 4.0x60	CNA 5.0x50	CNA 4.0x50	CNA 4.0x60	CNA 5.0x50	CNA 4.0x50	CNA 4.0x60	CNA 5.0x50
AB255HD	26	CNA/ CSA	5	ESCRFTC 8.0x140	13	CNA/ CSA	51.0	51.0	51.0	42.9	45.7	46.0	15.1	15.1	15.1	8.7	10.2	10.2

Product capacities – Timber to timber – Nail pattern 2

References	Fasteners						Characteristic capacities – Timber C24 – 1 angle bracket per connection [kN]											
	Flange A		Flange B				$R_{1,k}$			$R_{2,k} = R_{3,k}$			$R_{4,k}$			$R_{5,k}$		
	Qty	Type	Qty	Type	Qty	Type	CNA 4.0x50	CNA 4.0x60	CSA 5.0x50	CNA 4.0x50	CNA 4.0x60	CNA 5.0x50	CNA 4.0x50	CNA 4.0x60	CNA 5.0x50	CNA 4.0x50	CNA 4.0x60	CNA 5.0x50
AB255HD	30	CNA/ CSA	5	ESCRFTC 8.0x200	13	CNA/ CSA	62.2	62.2	62.2	46.5	49.7	53.5	15.1	15.1	15.1	10.2	10.2	10.2

Product capacities – Timber to timber – Nail pattern 3

References	Fasteners						Characteristic capacities – Timber C24 – 1 angle bracket per connection [kN]											
	Flange A		Flange B				$R_{1,k}$			$R_{2,k} = R_{3,k}$			$R_{4,k}$			$R_{5,k}$		
	Qty	Type	Qty	Type	Qty	Type	CNA 4.0x50	CNA 4.0x60	CSA 5.0x50	CNA 4.0x50	CNA 4.0x60	CNA 5.0x50	CNA 4.0x50	CNA 4.0x60	CNA 5.0x50	CNA 4.0x50	CNA 4.0x60	CNA 5.0x50
AB255HD	26	CNA/ CSA	3	ESCRFTC 8.0x200	13	CNA/ CSA	46.8	46.8	46.8	32.4	32.4	43.4	15.1	15.1	15.1	8.7	10.2	10.2

1) The supported timber member must be prevented from rotating by other means

2) The $R_{1,k}$ values are valid for any quantity of CNA/CSA fasteners on flange B.

Product capacities – Timber to timber – Fully screwed

References	Fasteners				Characteristic capacities – Timber C24 – 1 angle bracket per connection [kN]																			
	Flange A		Flange B		$R_{1,k}$					$R_{2,k} = R_{3,k}$					$R_{4,k}$					$R_{5,k}$				
	Qty	Type	Qty	Type	10.0x40	10.0x50	10.0x100	10.0x120	10.0x160	10.0x40	10.0x50	10.0x100	10.0x120	10.0x160	10.0x40	10.0x50	10.0x100	10.0x120	10.0x160	10.0x40	10.0x50	10.0x100	10.0x120	10.0x160
AB255SSH	7	SSH 10.0xL	9	SSH 10.0xL	8.3	19.1	26.1	42.6	56.2	17.4	24.7	35.0	42.6	48.5	13.7	15.1	15.1	15.1	15.1	4.3	5.1	5.4	5.4	5.5

C-C-UK-2023 ©2023 SIMPSON STRONG-TIE COMPANY INC.

AB255 Structural Angle Bracket

Product capacities – Timber to timber – Partially screwed

References	Fasteners				Characteristic capacities – Timber C24 – 1 angle bracket per connection [kN]																			
	Flange A		Flange B		$R_{1,k}$					$R_{2,k} = R_{3,k}$					$R_{4,k}$					$R_{5,k}$				
	Qty	Type	Qty	Type	10.0x40	10.0x50	10.0x100	10.0x120	10.0x160	10.0x40	10.0x50	10.0x100	10.0x120	10.0x160	10.0x40	10.0x50	10.0x100	10.0x120	10.0x160	10.0x40	10.0x50	10.0x100	10.0x120	10.0x160
AB255SSH	4	SSH 10.0xL	5	SSH 10.0xL	3.9	10.7	15.1	25.4	25.1	10.8	15.4	21.8	26.5	30.1	8.7	13.9	14.6	15.1	15.1	1.9	2.1	2.3	2.3	2.3

Note: Refer to Technical Information – Angle brackets and ties page, for information on force directions.

AB255HD
Nail pattern 1

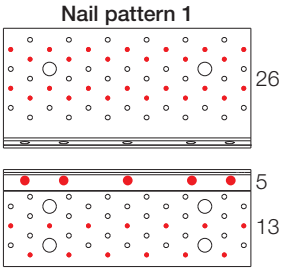

AB255HD
Nail pattern 2

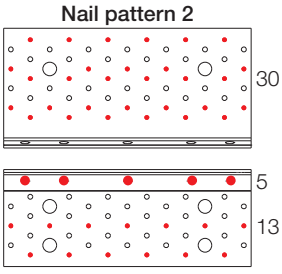

AB255HD
Nail pattern 3

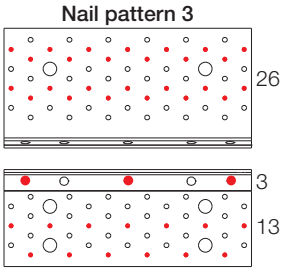

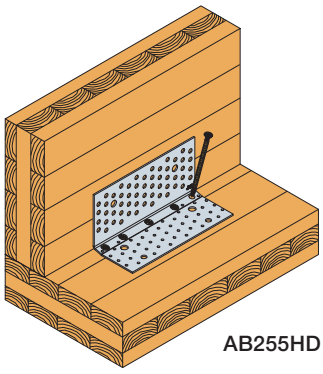

AB255HD

AB255SSH
Fully screwed

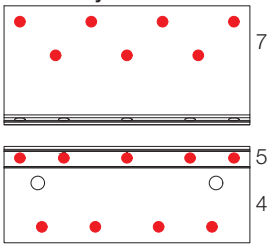

AB255SSH
Partially screwed

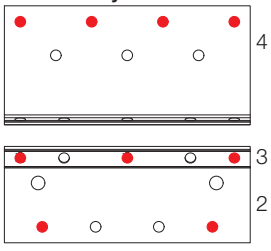

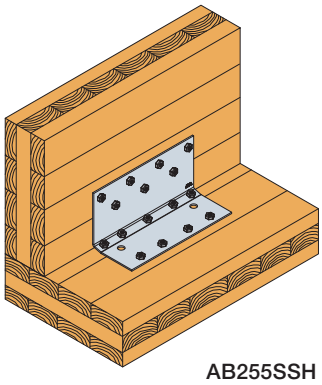

AB255SSH

END Multi Angle Bracket

The END angle brackets are designed to ensure versatility. The slots allow for adjustability when fixing.

Material: Pre-galvanised mild steel.

Product Dimensions

References	Dimensions [mm]				Holes			
					Flange A		Flange B	
	A	B	C	t	Ø6.5	Obround	Ø9	Obround
END55/1.5C50	55	71.5	30	1.5	-	1 x Ø6.5x30	1	1 x Ø9x20
END100/1.5C50	100	71.5	30	1.5	2	1 x Ø6.5x45	1	1 x Ø9x20

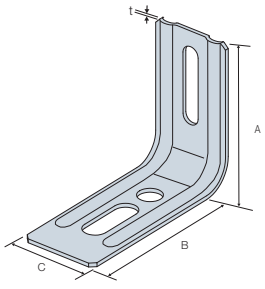

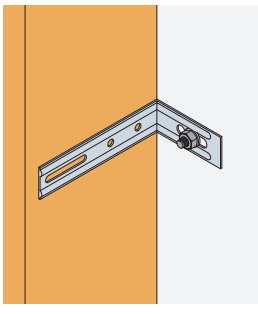

C-C-UK-2023 ©2023 SIMPSON STRONG-TIE COMPANY INC.

AKR Reinforced Angle Bracket for Timber Frames

The AKRX3 reinforced angle brackets for timber frames build on the existing range of reinforced brackets offering significant tensile strength.These brackets are recommended for withstanding uplift forces at the timber panel base. They are capable of supporting forces in all directions ($R_{1,k}$, $R_{2,k}$).

Material: Pre-galvanised mild steel.

- One-piece connector.
- Reinforced corners provide enhanced performance.
- CNA nails must be used to achieve the published loads.

Advantages:

- Anchors the timber frame wall solidly to the ground (recommended in seismic zones)
- Engineered to withstand tensile forces

Product Dimensions

References	Dimensions [mm]				Holes					
					Flange A		Flange B			
	A	B	C	t	Ø5.2	Ø13.5	Ø5.2	Ø11	Ø13.5	Ø13.5x25
AKR95X3L	95	85	65	3.0	9	-	2	1		1
AKR95LG	95	85	65	4.0	9	-	2	1	-	1
AKR95G	95	85	65	4.0	9	-	2	1	1	-
AKR135X3L	135	85	65	3.0	14	1	2	1		1
AKR135LG	135	85	65	4.0	14	1	2	1	-	1
AKR135G	135	85	65	4.0	14	1	2	1	1	-
AKR285X3L	285	85	65	3.0	26	3	2	1		1
AKR285LG	285	85	65	4.0	26	3	2	1	-	1
AKR285G	285	85	65	4.0	26	3	2	1	1	-

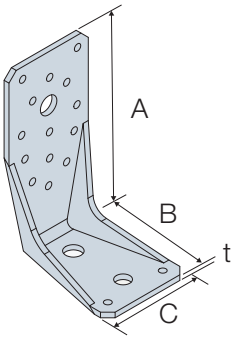

Performance Values

References	Fasteners			Characteristic Capacities [kN]					
	Flange A	Flange B		$R_{1,k}$			$R_{2,k} = R_{3,k}$		
	Qty	Qty	Anchor	CNA 4.0x40	CNA 4.0x50	CNA 4.0x60	CNA 4.0x40	CNA 4.0x50	CNA 4.0x60
AKR95X3L	5	1	M12	-	5.7	6.8	-	2.0	2.3
AKR95LG	8	1	M12	6.7	8.7	10.4	2.2	2.8	3.2
AKR95G	8	1	M12	8.8	11.3	13.2	2.5	3.1	3.5
AKR135X3L	8	1	M12	-	10.5	12.4	-	3.1	3.6
AKR135LG	13	1	M12	12.4	16.2	19.2	3.6	4.6	5.2
AKR135G	13	1	M12	15.9	20.3	23.5	4.0	5.0	5.6
AKR285X3L	22	1	M12	-	13.1	13.6	-	2.8	3.5
AKR285LG	25	1	M12	16.5	21.7	26.4	3.3	4.4	5.4
AKR285G	25	1	M12	22.6	29.5	35.2	4.4	5.8	7.0

The published characteristic capacity is based on short term load duration and service class 2 according to EC5 (EN 1995) – k_{mod} = 1.1. For other load directions, duration, fasteners and service class, please refer to the ETA-07/0285. $R_{4,k}$ and $R_{5,k}$ are provided in ETA.

Bolt factors for AKR

Load Direction	Bolt capacity (one AKR)
F_z	$R_{b,ax,d} \geq F_{1,d}$ x 1,0
$F_{3/4}$	$R_{b,ax,d} \geq F_{2/3,d}$ x 0,2
	$R_{b,lat,d} \geq F_{2/3,d}$ x 1,0

(1) For combined loads, the bolt forces from each load direction must be added.

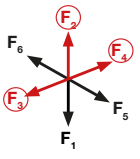

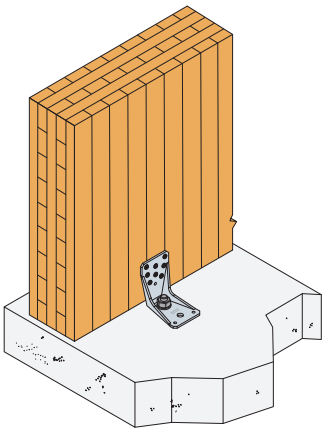

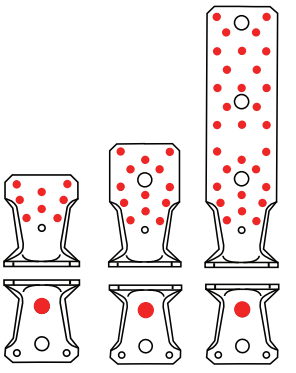

C-C-UK-2023 ©2023 SIMPSON STRONG-TIE COMPANY INC.

EA Light Reinforced Angle Bracket

The EA angle brackets are used to assemble structural joinery for internal applications.

Material: Pre-galvanised mild steel.

Product Dimensions

References	Dimensions [mm]				Holes					
					Flange A			Flange B		
	A	B	C	t	Ø5	Ø11	Obround	Ø5	Ø11	Obround
EA444/2C50	40	40	40	2.0	3	-	-	3	-	-
EA446/2C50	40	40	60	2.0	4	-	-	4	-	-
EA554/2C50	50	50	40	2.0	4	1	-	4	1	-
EA664/2C50	60	60	40	2.0	6	-	1 x Ø10x20	6	-	1 x Ø10x30
EA756/2C50	50	70	60	2.0	4	-	1 x Ø12x20	6	-	1 x Ø10x42

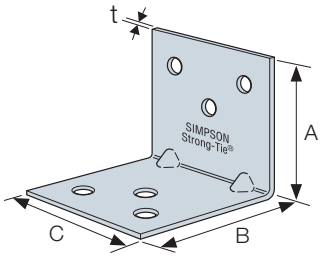

EA444/2C50

EC Light Duty Angle Bracket

The EC angle brackets are used for many DIY applications. They are generally adapted to reinforce structural pieces of furniture.

Material: Pre-galvanised mild steel.

Product Dimensions

References	Dimensions [mm]				Holes			
					Flange A		Flange B	
	A	B	C	t	Ø4	Ø5.8	Ø4	Ø5.8
EC40/2	40	40	15	2.0	2	-	2	-
EC60/2	60	60	15	2.0	2	-	2	-
EC80/2.5	80	80	18	2.5	2	-	2	-
EC100/3	100	100	18	3.0	-	2	-	2

1. Countersunk holes.

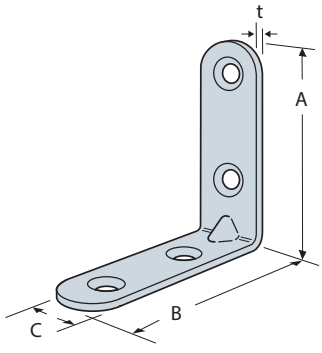

EC60/2C50

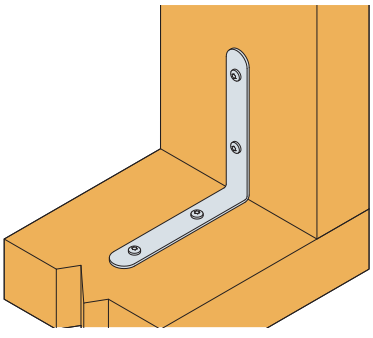

C-C-UK-2023 ©2023 SIMPSON STRONG-TIE COMPANY INC.

ECA Flat Plate Bracket

Flat Plate Brackets are used in a large number of DIY applications and are commonly used for reinforcing furniture assemblies.

Material: Electro-galvanised mild steel.

Product Dimensions

References	Dimensions [mm]			Holes				
				Flange A				
	A	B	t	Ø4.5	Ø4.6	Ø4.8	Ø5.2	Ø5.4
ECA55/2	55	15	2.0	-	4	-	-	-
ECA75/2	75	15	2.0	-	-	-	4	-
ECA95/2	95	15	2.0	-	-	4	-	-
ECA115/2	115	15	2.0	4	-	-	-	-
ECA135/2	135	18	2.0	-	-	-	-	4

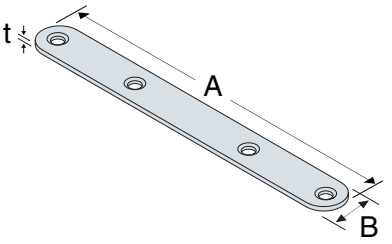

ECP Flat Corner Bracket

Flat Corner Brackets are used in a large number of DIY applications and are commonly used for reinforcing furniture assemblies.

Material: Electro-galvanised mild steel.

Product Dimensions

References	Dimensions [mm]				Holes					
					Flange A			Flange B		
	A	B	C	t	Ø3.6	Ø3.8	Ø4.5	Ø3.6	Ø3.8	Ø4.5
ECP40/1.2	40	40	10	1.2	-	2	-	-	2	-
ECP60/1.5	60	60	16	1.5	-	-	2	-	-	2
ECP80/2	80	80	16	2.0	-	-	2	-	-	2
ECP100/2	100	100	16	2.0	-	-	2	-	-	2

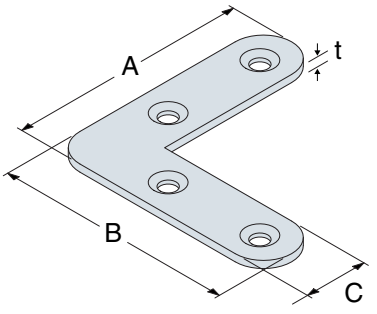

C-C-UK-2023 ©2023 SIMPSON STRONG-TIE COMPANY INC.

EFIXR Adjustable Angle Bracket

The EFIXR angle brackets are used for internal connections.

- Various bracket heights.
- Two slotted fixing holes for easier adjustment.

Material: Pre-galvanised mild steel.

Product Dimensions

References	Dimensions [mm]				Holes			
					Flange A		Flange B	
	A	B	C	t	Ø5	Obround	Ø5	Obround
EFIXR553C50	50	55	30	2.0	4	1 x Ø6.5x30	4	1 x Ø8.5x30
EFIXR753C50	70	55	30	2.0	5	1 x Ø6.5x50	4	1 x Ø8.5x30
EFIXR1053C50	100	55	30	2.5	6	1 x Ø6.5x65	4	1 x Ø8.5x30
EFIXR1253C50	120	55	30	3.0	6	1 x Ø6.5x65	4	1 x Ø8.5x30

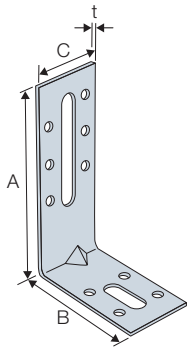

EFIXR

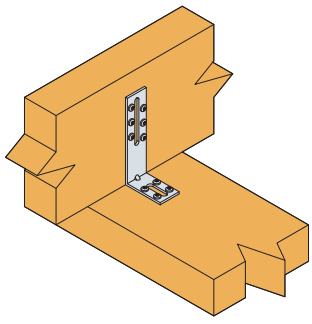

ES Nail Plate Angle Bracket

The ES angle bracket is very versatile, used for timber to timber connections.

Material: Pre-galvanised mild steel.

Product Dimensions

References	Dimensions [mm]				Holes	
					Flange A	Flange B
	A	B	C	t	Ø5	Ø5
ES10/40C50	60	60	40	2.5	5	5
ES11/60	80	80	60	2.5	11	11

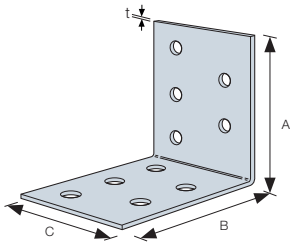

Performance Values

References	Fasteners		Characteristic Values [kN]			
			$R_{2,k}$		$R_{3,k} = R_{4,k}$	
	Flange A	Flange B	CNA4.0x35	CNA4.0x40	CNA4.0x35	CNA4.0x40
ES10/40C50	3	3	2.7	3.1	2.7	3.2
ES11/60	8	6	3.6	4.9	7.3	9.8

Note: Refer to Technical Information – angle brackets and ties page, for information on force directions.

C-C-UK-2023 ©2023 SIMPSON STRONG-TIE COMPANY INC.

EBC Angle Bracket for Cladding

The EBC angle bracket has been designed to fix vertical battens directly to the supporting structure without the need for additonal battens. It creates a zone for insulation and/or ventilation between the wall and the cladding.

- Connects vertical battens directly to the supporting structure (concrete).
- Creates a zone for insulation or ventilation.
- Reduces installation time, materials and cost.

Material: Pre-galvanised mild steel.

Product Dimensions

References	Dimensions [mm]				Holes			
					Flange A		Flange B	
	A	B	C	t	Ø5	Ø8.5x40 Obround	Ø8.5x30 Obround	Ø11.5x30 Obround
EBC100/2.5	98	53	64	2.5	6	1	2	1
EBC120/2.5	118	53	64	2.5	6	1	2	1
EBC140/2.5	138	53	64	2.5	6	1	2	1
EBC160/2.5	158	53	64	2.5	6	1	2	1
EBC200/2.5	198	53	64	2.5	6	1	2	1
EBC210/2.5	208	53	64	2.5	6	1	2	1

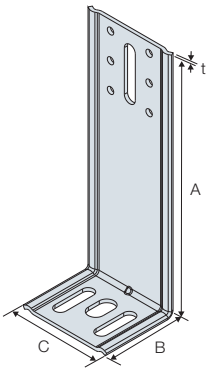

Performance Values

References	Fasteners		Characteristic Capacities [kN] per Bracket		
			$R_{1,k}$ Slip under load measured at extremity of bracket		$R_{5,k}$
	CSA5.0x40	Anchor	1mm	3mm	
EBC100/2.5	2	1 x M8	0.22	0.36	1.56
EBC120/2.5	2	1 x M8	0.22	0.36	1.56
EBC140/2.5	2	1 x M8	0.18	0.31	1.56
EBC160/2.5	2	1 x M8	0.18	0.31	1.56
EBC200/2.5	2	1 x M8	0.07	0.19	1.56
EBC210/2.5	2	1 x M8	0.07	0.19	1.56

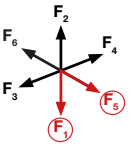

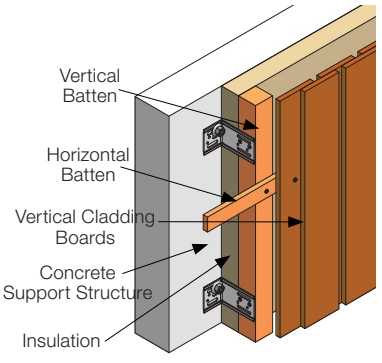

Vertical Cladding

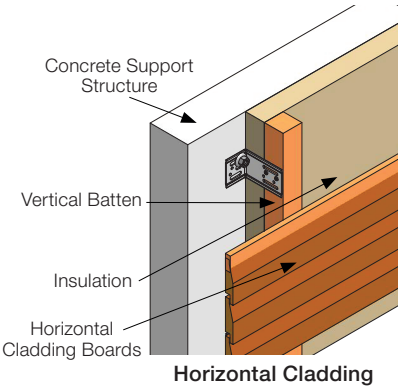

Horizontal Cladding

For performance values onto timber frame structures please contact technical department or visit www.strongtie.co.uk

C-C-UK-2023 ©2023 SIMPSON STRONG-TIE COMPANY INC.

TJC Adjustable Skewed Bracket

NEW

TJC is a versatile connector for skewed members. Adjustable from 0° - 67.5° (shipped with a 67.5° bend). Nail hole locations allow for easy installation.

Material: Pre-galvanised mild steel

Installation:

- Use the specified number of fasteners (see performance table for fastener type)
- Position the skewed member on the inside of the bend line with the end of the member flush with the bend line
- Bend the TJC to the desired position (one bend cycle only)

Product Dimensions

References	Dimensions [mm]				Holes			
					Flange A		Flange B	
	A	B	C	t	Ø3.75	Triangular	Ø3.75	Triangular
TJC37	79	89	89	1.6	4	2	4	2
TJC57	130	89	89	1.6	12	-	12	-

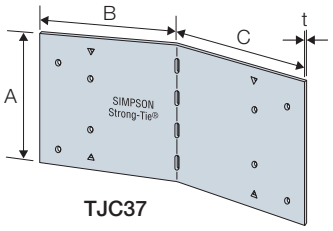

TJC37

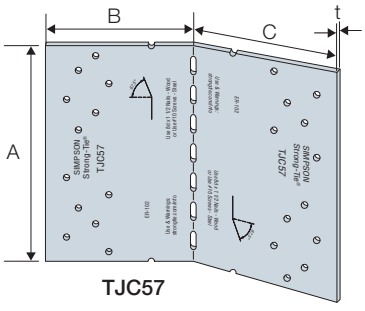

TJC57

Performance Values – Standard Installation

References	Fasteners		Safe Working Loads [kN]			
	Flange B	Flange C	$R_1 = R_{2,SWL,\ MT}$			
	Qty (N3.75x30)	Qty (N3.75x30)	Skew 0°	Skew 1° - 60°	Skew 61° - 67.5°	Skew 68° - 85°
TJC37	4	4	1.5	1.2	1.4	1.1
	6	6	2.3	1.9	1.7	1.7
TJC57	12	12	3.7	3.5	3.3	3.3

Performance Values – Alternate Installation

References	Fasteners		Safe Working Loads [kN]	
	Flange B	Flange C	$R_1 = R_{2,SWL,\ MT}$	
	Qty (N3.75x30)	Qty (N3.75x30)	Skew 0°	Skew 1° - 45°
TJC37	4	4	1.1	1.0
	6	6	1.9	1.6
TJC57	12	12	3.5	3.3

1) TJC37 and TJC57 require single-ply supported trusses with minimum 35mm x 97mm and 35mm x 147mm bottom chord members, respectively

2) TJC37 maximum installation fill all round and triangular holes

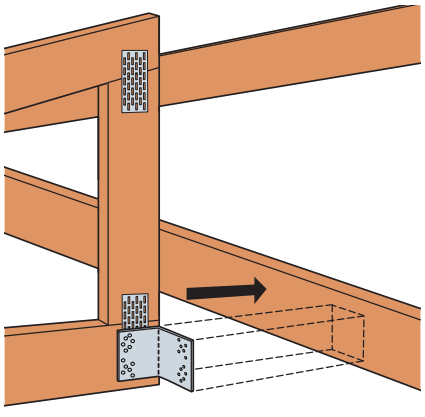

TJC Alternate Installation

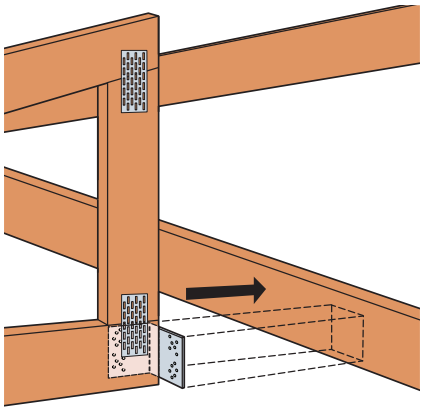

TJC Standard Installation

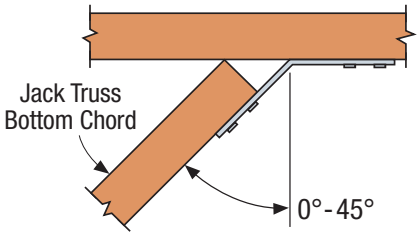

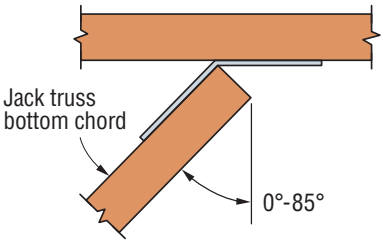

C-C-UK-2023 ©2023 SIMPSON STRONG-TIE COMPANY INC.

H2.5A High Wind Tie

The H2.5A tie is for trusses and rafters likely to be subject to high winds. This versatile connector may be used for general purposes, strongback attachments and as an all-purpose tie where one timber crosses another.

H2.5A may be installed in pairs to achieve twice the stated safe working loads.

Material: Pre-galvanised mild steel.

Installation: Use all the specified fasteners.

Product Dimensions

References	Dimensions [mm]						Holes	
	A	B	C	D	E	t	Flange D	Flange E
							Ø4	Ø4
H2.5A	35	150	41	55	55	1.2	5	5

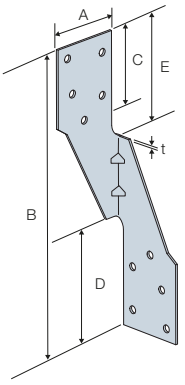

Performance Values

References	Fasteners		Safe Working Loads		
	To Rafters	To Plates	$R_{2,\ SWL,\ Short\ Term}$	Lateral Short	
	N3.75x30	N3.75x30		$R_{3,\ SWL,\ Short\ Term}$	$R_{4,\ SWL,\ Short\ Term}$
H2.5A	5	5	2.31	0.49	0.49

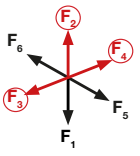

1. SWLs are for one anchor.
2. When cross-grain bending or cross-grain tension cannot be avoided, mechanical reinforcement to resist all such forces should be considered.

H2.5A Installation

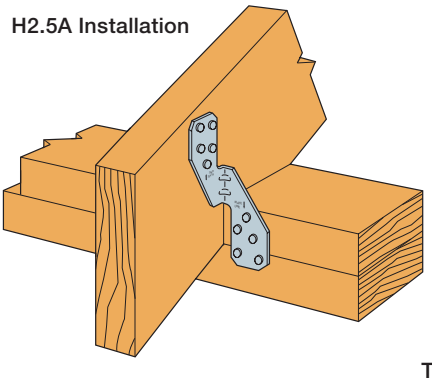

Top View Installation to Achieve Twice the Load

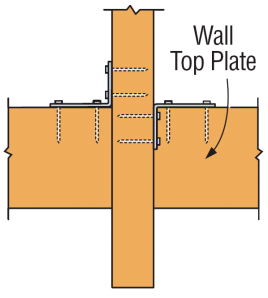

H2.5A can be installed on the same side of the wall plate.

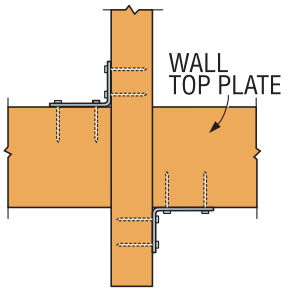

Install H2.5A diagonally across from each other for single ply 35mm or 47mm trusses.

C-C-UK-2023 ©2023 SIMPSON STRONG-TIE COMPANY INC.

PWR Partition Wall Restraint

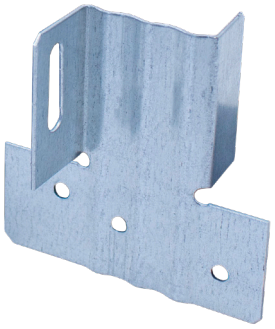

The PWR connector is used to laterally restrain the top of a non-load bearing partition wall by connecting it to the floor joists above. The tapered slot allows for joist deflection when it is loaded, while still restraining the partition wall.

- Provides lateral restraint to non-load bearing partition walls.
- Allows joist deflection.

Material: Pre-galvanised mild steel.

- Position the connector on top of the header rail and against the floor joist.
- Secure the connector to the header rail with the specified fasteners.
- The bottom of the location tab should sit on the top of the header rail.
- Secure the connector to the joist with the specified fasteners, allowing a 1-2mm gap between the underside of the fastener head and the PWR connector.
- Maximum gap between the partition and the joist is 15mm.
- Ensure that the fastener is at the upper edge of the tapered slot as this allows for the deflection of the joist.

STN RECOMMENDED FIXINGS

Product Dimensions

References	Dimensions [mm]						Holes	
	A	B	C	D	E	t	Flange A	Flange B
							Ø4.1	Tapered Slot
PWR15	65	36	65	20	15	1.0	3	1

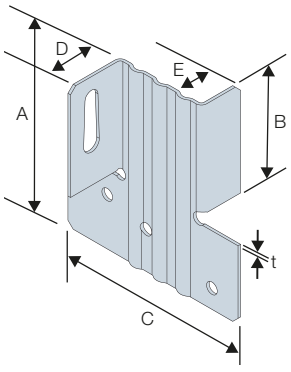

Performance Values

References	Fasteners		Safe Working Loads [kN]
	Flange A	Flange B	$R_{4,\ SWL,\ Short\ Term}$
			N3.75x30
PWR15	3	1	0.50

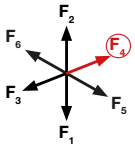

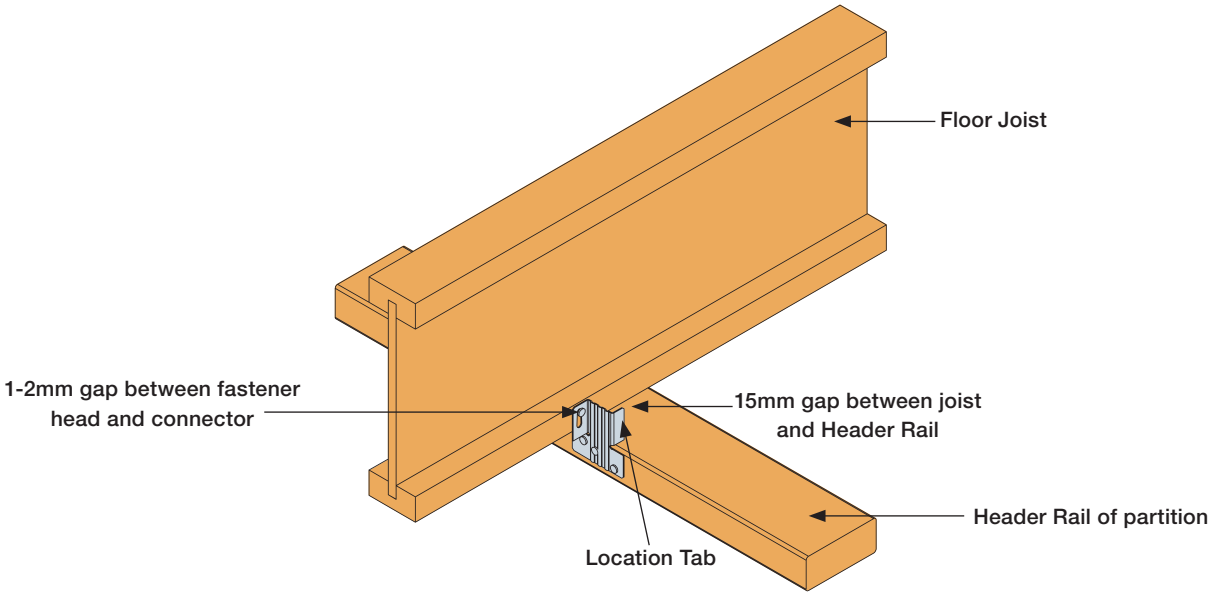

C-C-UK-2023 ©2023 SIMPSON STRONG-TIE COMPANY INC.

SPF Purlin Anchor

The SPF can be used to connect two timbers that cross over at 90 degrees to each other and can be used with a number of timber dimensions. The SPF are handed, left and right, and are sold separately.

Note: The brackets are manufactured in right and left versions and are sold individually.

Material: Pre-galvanised mild steel.

Installation:

- Where timbers cross, use two SPFs, diagonally opposite each other.
- Fill all nail holes.

Product Dimensions

References	Dimensions [mm]					Holes	
	A	B	C	E	t	Flange C	Flange E
						Ø5	Ø5
SPF290L	290	33	220	220	2.0	22	22
SPF290R	290	33	220	220	2.0	22	22
SPF370L	370	33	300	300	2.0	26	26
SPF370R	370	33	300	300	2.0	26	26

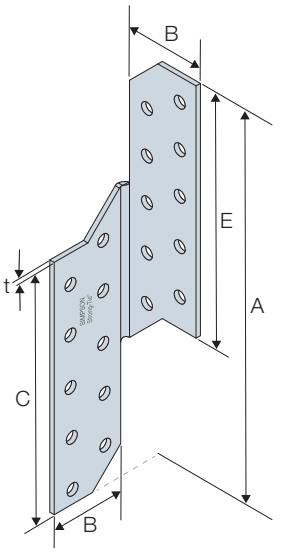

Performance Values

References	Fasteners		Characteristic Loads Loads [kN]		
			$R_{2,k}$	$R_{3,k} = R_{4,k}$	$R_{5,k} = R_{6,k}$
			CNA4.0x50	CNA4.0x50	CNA4.0x50
SPF290	11	11	14.7	2.0	4.9
SPF370	15	15	14.9	2.0	4.9

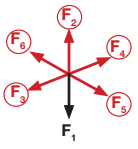

- Capacities are for one SPF
- Published capacities are based upon a short term load duration, in service class 2.
- Capacity for connections with two SPF are double the capacity of one SPF

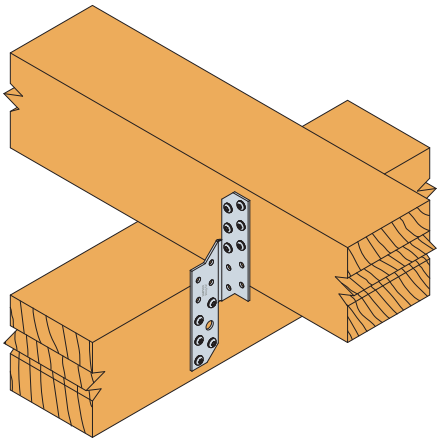

C-C-UK-2023 ©2023 SIMPSON STRONG-TIE COMPANY INC.

T Flat “T” Shaped Bracket

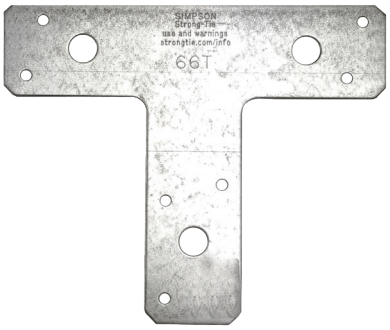

Material: Pre-galvanised mild steel.

Benefits:

Can be used to reinforce the “T” junction in Post to Beam/Column to Beam connections in timber structures.

Product Dimensions

References	Dimensions [mm]				Holes	
	A	B	C	t	Ø4.1	Ø11
66T	38	125	150	2.0	8	3

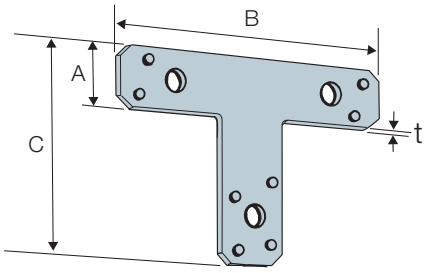

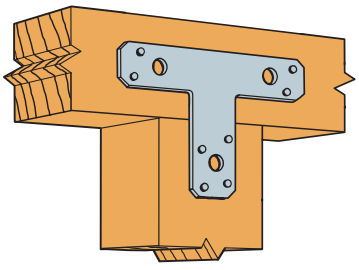

Typical 66T Installation

L Flat “L” Shaped Bracket

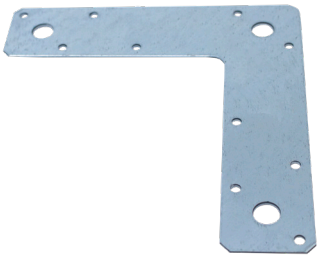

66L

Material: Pre-galvanised mild steel.

Benefits:

The “L” shaped bracket can be used to reinforce the junction between two timber members crossing to form an L shape.

Product Dimensions

References	Dimensions [mm]				Holes		
	A	B	C	t	Ø4.0	Ø4.3	Ø11
55L	32	120	120	1.5	5	-	-
66L	38	152	152	1.8	-	10	3

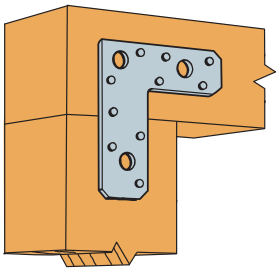

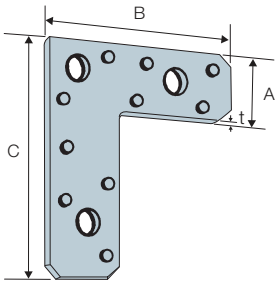

C-C-UK-2023 ©2023 SIMPSON STRONG-TIE COMPANY INC.

LS Skewable Angle

Designed to attach timber members at irregular angles, these connectors can be bent on site from 0° to 135°. The staggered nail pattern reduces the possibility for splitting the timber and allows installation on both sides of the member.

Material: Pre-galvanised mild steel.

Installation: Use all specified fasteners. Angles should be bent to suit installation only once. Joists must be constrained against rotation (for example, with solid blocking) when using a single LS Angle per connection.

Product Dimensions

References	Dimensions [mm]				Holes	
	A	B	C	t	Flange B	Flange C
					Ø4 x 7 Obround	Ø4 x 7 Obround
LS30	85	55	55	1.3	3	3
LS50	124	55	55	1.3	4	4
LS70	162	55	55	1.3	5	5

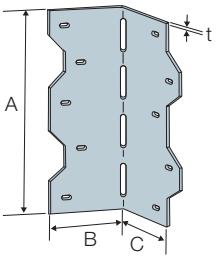

Performance Values

References	Fasteners		Safe Working Loads [kN]		Characteristic Capacity [kN]
	Flange B	Flange C	$R_1 = R_{2,SWL,Long\ Term}$	$R_1 = R_{2,SWL,Mediun\ Term}$	$R_{1,k} = R_{2,k}$
			N3.75x75	N3.75x75	N3.75x75
LS30	3	3	1.29	1.60	2.80
LS50	4	4	1.73	2.16	4.30
LS70	5	5	2.16	2.58	4.40

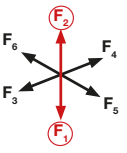

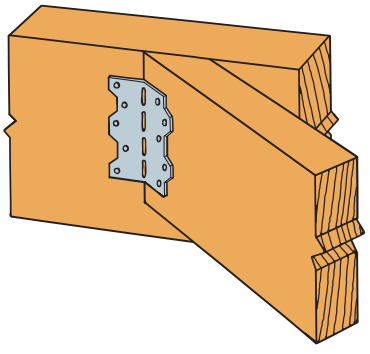

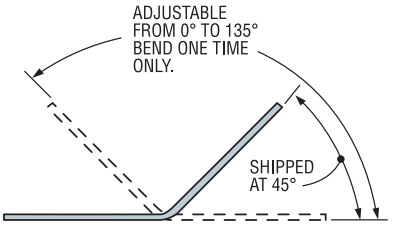

LS70 Top View

C-C-UK-2023 ©2023 SIMPSON STRONG-TIE COMPANY INC.

DSTC/SSTC Double & Single Sided, Toothed Connectors

Single sided and double sided connector plates for enhanced bolt performance in timber. Conforms to BS EN 912: 1999 Annex C. Specification for toothed plate connectors.

Material: Pre-galvanised mild steel.

Product Dimensions

References	Dimensions [mm]			Fixing Holes			Bolt Hole d_1			
	d_c	h_t	t	Ø4	Ø4.5	Ø5	Ø12	Ø17	Ø21	Ø26
SSTC50	48	6,6	1.0	2	-	-	1	-	-	-
SSTC60	62	8,7	1.2	-	2	-	1	-	-	-
SSTC75	75	10,4	1.3	-	-	2	-	1	-	-
DSTC50C50	48	13,0	1.0	2	-	-	-	1	-	-
DSTC60	62	16,0	1.2	-	2	-	-	-	1	-
DSTC75	75	19,5	1.3	-	-	2	-	-	-	1

NOTE: Products contain 2 nail holes for temporary fixing.

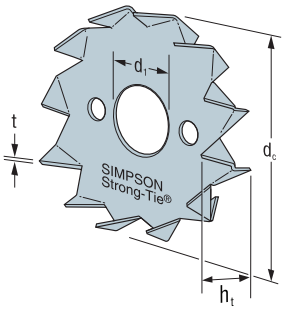

DSTC

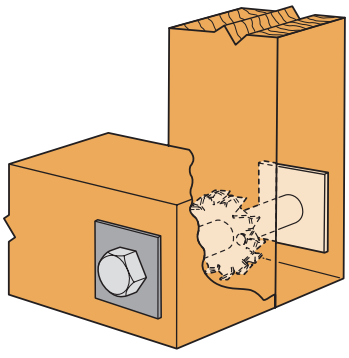

Typical DSTC Installation

SSTC

C-C-UK-2023 ©2023 SIMPSON STRONG-TIE COMPANY INC.

PBP Post Base

The PBP60/50 post base is most commonly used for pergola or porch type construction, but can be used in other situations.

Material: Mild steel, sherardised class C30.

- Can be used with different post sizes.
- 50mm stand off.
- Order as separate item, use in pairs.
- Not recommended for installations where the top of the post/column is not restrained (eg fence posts).

Product Dimensions

References	Dimensions [mm]						Holes		
	A	B	C	D	F	t	Top		Base
							Ø5	Ø13	Ø12 x 25 Slot
PBP60/50	35	60	140	62	49	3.0	7	2	1

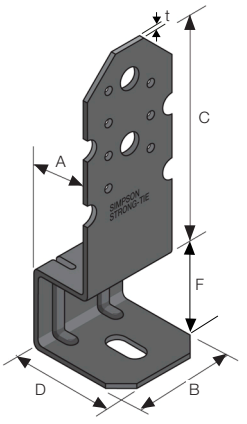

Performance Values

References	Timber Post Size [mm]	Post Bases	Fasteners				Characteristic Capacities – Timber C24 [kN]	
			Post		Concrete			
		Qty	Qty	Nail	Qty	Anchor	$R_{1,k}$	$R_{2,k}$
PBP	70x70 - 150x150	2	14	CNA4.0x50	2	M10	40.0	11.9
	150x150 - 250x250	4	28	CNA4.0x50	4	M10	90.0	11.9

1. The published characteristic capacity is based on medium term load duration and service class 3 according to EC5 (EN 1995) (k_{mod} = 0.7). For other load duration and service class, please refer to the ETA.
2. Typical anchor solutions are Simpson AT-HP resin and LMAS anchors, depending on the concrete type, spacing and edge distances, see section 17 for details.

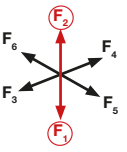

PBP Installation:

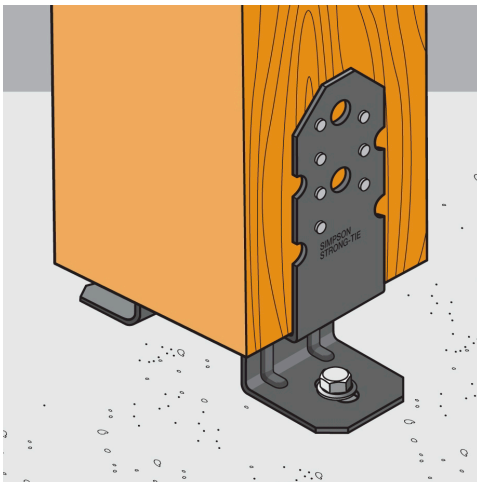

Step 1: Measure positions and bolt down to floor with appropriate fixing (M10), ensuring the post bases are parallel to one another. (Length of fixing to be advised by structural engineer).

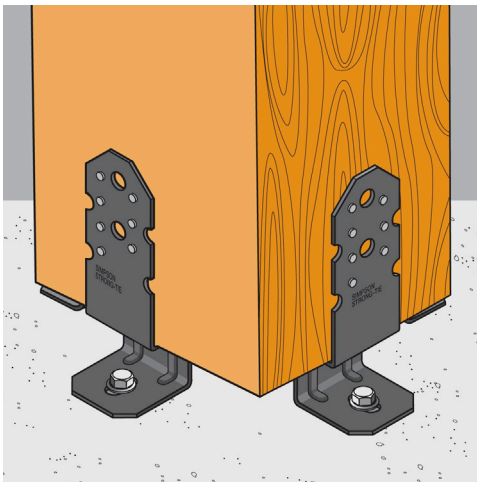

Step 2: Lower the post onto the post bases (2 or 4) ensuring they are aligned with the centre of the post and install CNA4.0x50 nails. CSA5.0x50 screws can be used as an alternative to the CNA nail.

C-C-UK-2023 ©2023 SIMPSON STRONG-TIE COMPANY INC.

PBWS ZPRO Folded Post Base

NEW

PBWS is single-piece, non-welded post base for connecting timber to concrete. An engineered solution manufactured in Europe, this connector requires up to 45% less steel than a traditionally designed post base.

Material: Steel: Pre-galvanised mild steel.
Corrosion protection: ZPRO coating - corresponding to a zinc layer of approx. 55 µm.

- Not recommended for installations where the top of the post/column is not restrained (eg fence posts).

Product Dimensions

References	Dimensions [mm]							Side Flange Holes	
	A	B	C	E	F	G	t	Ø5	Ø8.5
PBWS45Z	45	40	99.5	50	150	22	3.0	4	2
PBWS48Z	48	40	98	50	150	22	3.0	4	2
PBWS70Z	70	40	87	50	150	22	3.0	4	2
PBWS73Z	73	40	85.5	50	150	22	3.0	4	2
PBWS90Z	90	40	77	50	150	22	3.0	4	2
PBWS98Z	98	40	73	50	150	22	3.0	4	2
PBWS100Z	100	40	72	50	150	22	3.0	4	2

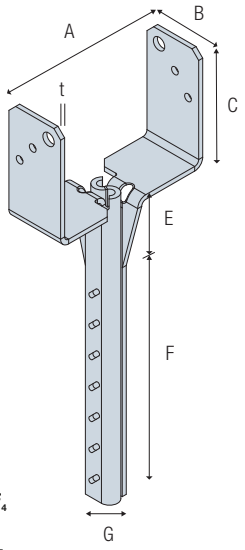

PBWS ZPRO Product Capacities

References	Fasteners		Characteristic Capacities - Timber C24 [kN]	
	Qty	Type	$R_{1,k}$	$R_{2,k}$
PBWS	4	CSA5.0x40	20.2	2.5
	2	SSH8x40	20.2	2.5

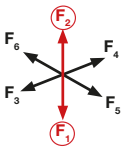

Installation Options

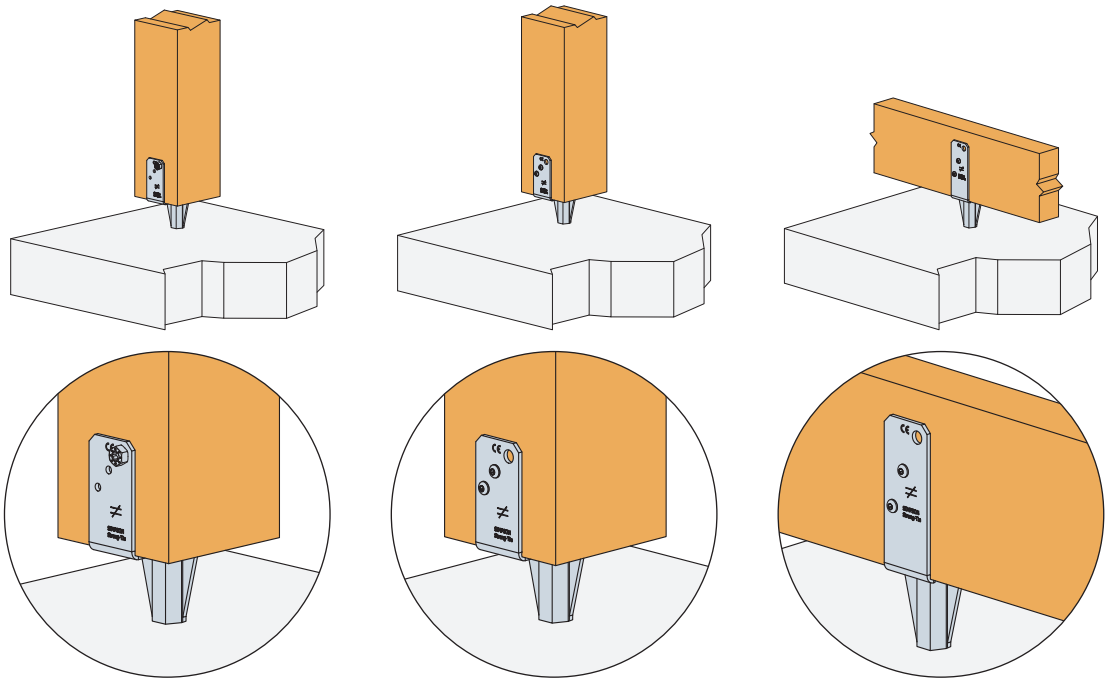

Post Installation
2 x SSH Hex Head Screws

Post Installation
4 x CSA Connector Screws

Beam Installation
4 x CSA Connector Screws

C-C-UK-2023 ©2023 SIMPSON STRONG-TIE COMPANY INC.

CPT Concealed Post Base

The CPT post base provides a clean look while providing a 25mm stand off height above the ground, reducing the potential for decay at the post end.

The CPT can be fixed to a concrete base with M12 resin anchors (sold separately, see section 17 for details).

Material: Flitch plate, washers and stand off base are pre-galvanised mild steel. The stand off base has an additional textured, flat black powder coat finish for aesthetic purposes.

The dowels (included) are mechanically galvanised.

- Not recommended for installations where the top of the post/column is not restrained (eg fence posts).

Product Dimensions

References	Timber Post Size [mm]	Dimensions [mm]							Washer	Holes	
		A	B	C	F	H	t_1	t_2		Top Plate	Bottom Plate
										Ø13.5	Ø13.5
CPT44Z	89x89 to 100x100	89	89	145	25	79	3,5	2.7	36x29x3.5	3	2
CPT66Z	133x133 to 150x150	133	133	145	25	114	3,5	2.7	36x29x3.5	3	2
CPT88Z	184x184 to 203x203	184	184	145	25	114	3,5	2.7	36x29x3.5	3	2

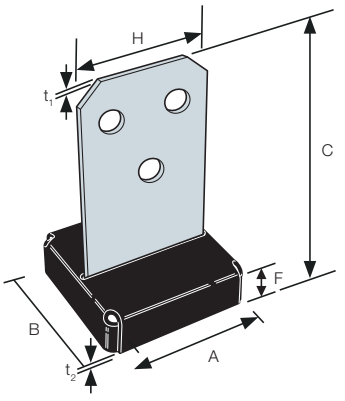

Performance Values

References	Fasteners				Characteristic Values – Timber C24 [kN]			
	Post		Concrete					
	Qty	Dowels	Qty	Anchors	$R_{1,k}$	$R_{2,k}$	$R_{3,k} = R_{4,k}$	$R_{5,k} = R_{6,k}$
CPT44Z	3	Ø13 x 70	2	M12	59.4	11.2	7.3	3.9
CPT66Z	3	Ø13 x 120	2	M12	91.2	16.3	9.1	5.6
CPT88Z	3	Ø13 x 120	2	M12	123.1	16.3	9.1	5.6

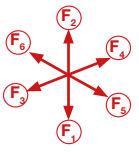

Installation:

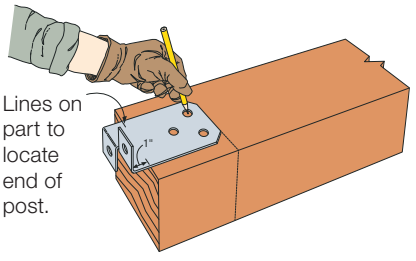

Step 1: Use the flitch plate as a template to mark dowel locations.

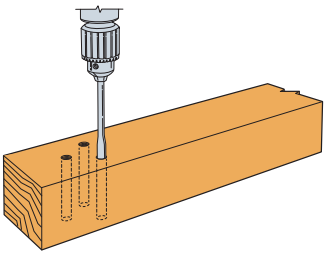

Step 2: Drill 13mm holes perpendicular to the post at marked locations.

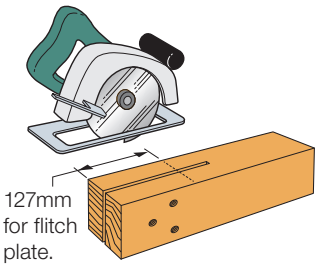

Step 3: Cut a 5mm wide slot on the side adjacent to the drilled holes. Check that the flitch plate slides freely.

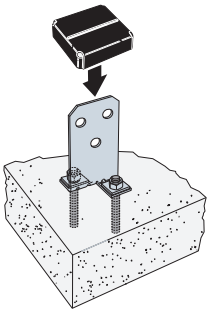

Step 4: Fix down the flitch plate to concrete foundation and lower the stand off base over the flitch plate.

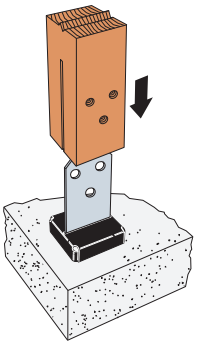

Step 5: Lower the post onto the flitch plate with the drilled holes aligned with the three holes in the flitch plate. Be careful to avoid rotating the post during installation.

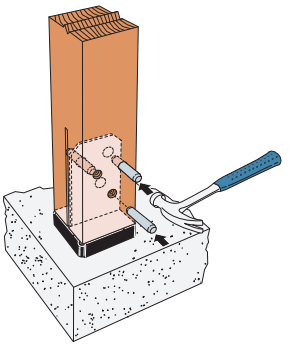

Step 6: Drive the dowels into the post and through the flitch plate. The dowels should be roughly centred within the post.

C-C-UK-2023 ©2023 SIMPSON STRONG-TIE COMPANY INC.

PPRC Adjustable Post Base

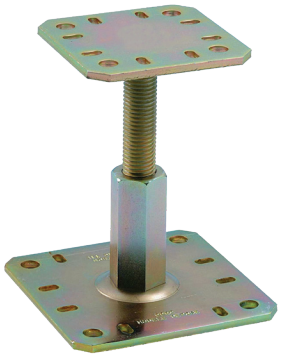

The PPRC allows the structure to be adjusted after it has been built. Adjust the off the ground height from 100 to 150mm even after the post has been installed by turning the nut clockwise/anti-clockwise with a wrench.

Material: Dichromate coated galvanised mild steel.

Installation:

- Fix to the foundation with M10 anchors. Fix to the post using M10 coach screws.
- 130 x 130mm plate fixes to the ground.
- 100 x 100mm plate fastens to the post.
- PPRC can be adjusted with a 30mm wrench after both plates are attached.
- Not recommended for installations where the top of the post/column is not restrained (eg fence posts).

Product Dimensions

References	Timber Post Size [mm]	Dimensions [mm]							Holes flange A/B		Holes flange C/D	
		A	B	D	E	G	F	t	Ø12	Slots Ø16 x 12	Ø12	Slots Ø16 x 12
PPRC	100x100 to 200x200	100	100	130	130	30	100-150	5.0	4	8	4	8

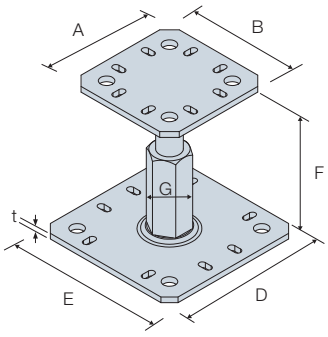

Performance Values

References	Fasteners		Characteristic Capacity [kN]
	Post	Concrete	$R_{1,K}$
PPRC	4 - M10 Coach Screw	4 - M10 Anchor	61.0

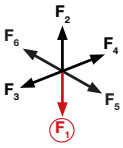

Note: The published characteristic capacity is based on medium term load duration and service class 3 according to EC5 (EN 1995). For other load duration and service class, please refer to the ETA to get more accurate capacities.

APB Adjustable Elevated Post Base

The APB features a post mounting plate on a screw allowing it to be adjusted to a specific stand off height ranging from 100-150mm.

Material: Pre-galvanised mild steel.

Installation:

- Fix to the foundation with 10mm resin anchors.
- Adjust to the required stand off height.
- Fix post to top plate using M10 coach screws.
- Not recommended for installations where the top of the post/column is not restrained (eg fence posts).

Product Dimensions

References	Timber Post Size [mm]	Dimensions [mm]							Holes flange A/B	Holes flange C/D
		A	B	D	E	G	F	t	Ø12	Ø12
APB100/150	100x100 to 200x200	100	100	130	130	20	100-150	5	4	4

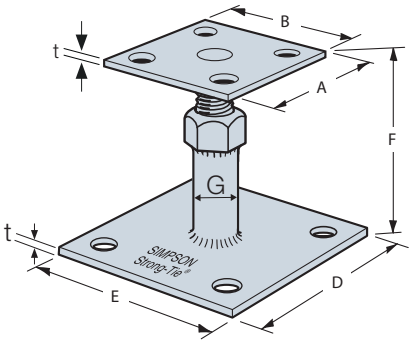

Performance Values

References	Fasteners		Characteristic Capacity [kN]
	Post	Concrete	$R_{1,k}$
APB	4 - M10 Coach Screw	4 - M10 Anchor	69.3

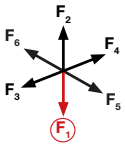

C-C-UK-2023 ©2023 SIMPSON STRONG-TIE COMPANY INC.

ABW Adjustable Post Base with Stand Off

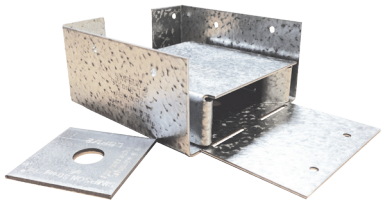

The ABW is an adjustable post base with a stand off for the post to help prevent moisture induced decay to the timber post. Designed for versatility and cost effectiveness. Slot in the base enables flexible positioning around the anchor bolt. Can be installed onto a threaded bar in poured concrete or with a resin or mechanical anchor into solid concrete (sold separately).

Material: Pre-galvanised mild steel.

Installation:

- Place the base, washer and nut on the anchor bolt, loosely fasten the nut.
- Place the stand off base and then the post in the ABW and fasten on three vertical sides.
- Make any necessary adjustments to post placements and tighten the nut anchor securely, via the open side.
- Bend up the fourth side of the ABW and fasten.
- Not recommended for installations where the top of the post/column is not restrained (eg fence posts).

RWN RECOMMENDED FIXINGS

Product Dimensions

References	Timber Post Size [mm]	Dimensions [mm]						Washer	Holes	
									Top	Base
		A	B	C	F	t_1	t_2		Ø4.1	Ø14
ABW44Z	89x89	91	91	60	25	1.6	1.6	50x50x3.5	4	1
ABW44RZ	100x100	102	102	50	25	1.6	1.6	50x50x3.5	4	1
ABW66Z	133x133	140	140	76	25	1.8	2.7	76x76x6.0	12	1
ABW66RZ	150x150	152	152	71	25	1.8	2.7	76x76x6.0	12	1

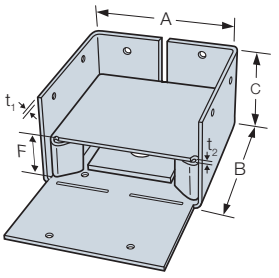

Performance Values

References	Fasteners				Characteristic Capacity [kN]	
	Post		Concrete		$R_{1,k}$	$R_{2,k}$
	Qty	Type	Qty	Anchors		
ABW44Z	8	N3.75x75	1	M12	53.9	3.1
ABW44RZ	8	N3.75x75	1	M12	58.2	-
ABW66Z	12	N4.0x90	1	M12	105.9	7.4
ABW66RZ	12	N4.0x90	1	M12	110.4	6.6

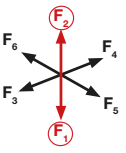

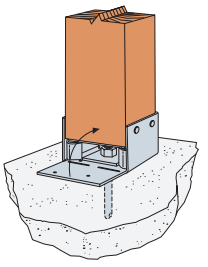

Anchor to be specified by designer

PBS Post Base with Stand Off

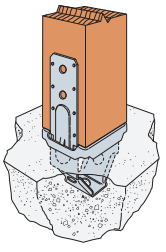

The PBS post base is designed to be installed into wet concrete and features a stand off to help prevent moisture induced decay to the timber post.

Material: Pre-galvanised mid steel.

Installation: Embed into wet concrete up to the bottom of the 25mm stand off base.

STN RECOMMENDED FIXINGS

Product Dimensions

References	Timber Post Size [mm]	Dimensions [mm]									Top Holes		Base Holes
		A	B	C	D	E	F	G	H	t	Ø4.3	Ø14	Ø19
PBS44AZ	89x89	91	57	159	89	91	25	57	84	2.5	14	4	3

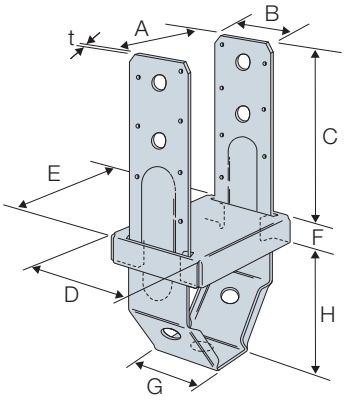

Performance Values

References	Fasteners [1]				Characteristic Capacity [kN] – Timber C24		
	Post				$R_{1,k}$	$R_{2,k}$	
	Nails		Bolts			Nails	Bolts
	Qty	Type	Qty	Type			
PBS	12	N3.75x75	2	M12	60.9	24.0	16.0

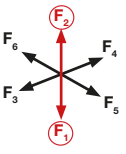

1. Use either nails or bolts into the post

C-C-UK-2023 ©2023 SIMPSON STRONG-TIE COMPANY INC.

PBH Heavy Duty Elevated Post Base

The PBH is suitable for heavy duty post support applications including Glulam timber posts, with a stand off height of 216mm. Dowels included.

Material: Hot-dip galvanised mild steel plate.

Installation:

- Use the flitch plate to mark and drill the 8mm diameter holes for the dowels.
- Cut a 9mm slot in the side adjacent to the drilled holes, for the flitch plate.
- Fix to the foundation with M12 anchors.
- Lower the post onto the flitch plate, align the holes and fit the dowels.
- Not recommended for installations where the top of the post/column is not restrained (eg fence posts).

Stainless steel option available to order.

Product Dimensions

References	Timber Post Size [mm]	Dimensions [mm]										Holes	
		A	B	C	D	E	F	G	H	t_1	t_2	Top Plate	Bottom Plate
												Ø8.5	Ø14
PBH75	75x75 - 120x120	75	75	110	160	100	216	Ø42	45	8.0	8.0	2	2
PBH120	120x120 - 200x200	120	120	110	155	155	216	Ø42	90	8.0	8.0	4	4

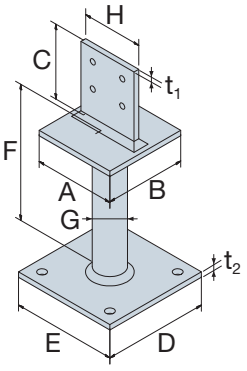

Performance Values

References	Fasteners				Characteristic Capacities – Timber C24 [kN]			
	Post		Concrete					
	Qty	Dowels	Qty	Anchors	$R_{1,k}$	$R_{2,k}$	$R_{3,k} = R_{4,k}$	$R_{5,k}=R_{6,k}$
PBH75	2	Ø8x80	4	M12	105.5	8.1	5.5	5.8
PBH120	4	Ø8x120	4	M12	156.4	20.7	7.7	7.3

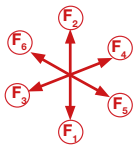

PBH Installation:

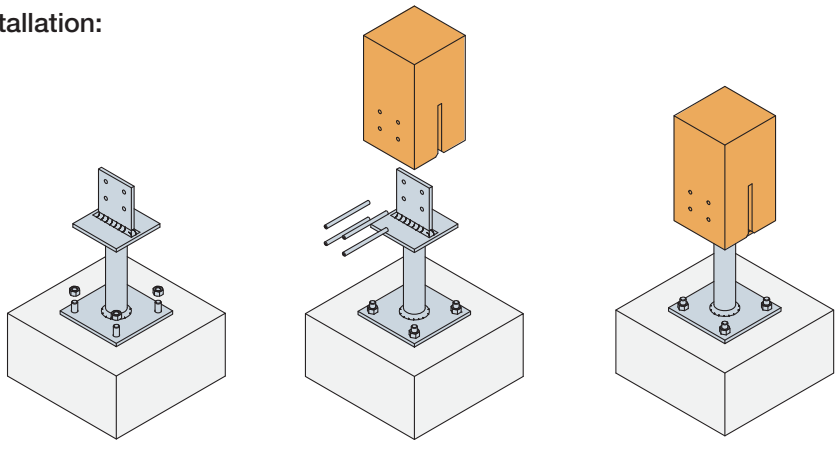

Step 1 Step 2 Step 3

C-C-UK-2023 ©2023 SIMPSON STRONG-TIE COMPANY INC.

PISBMAXI Post Base with Stand Off

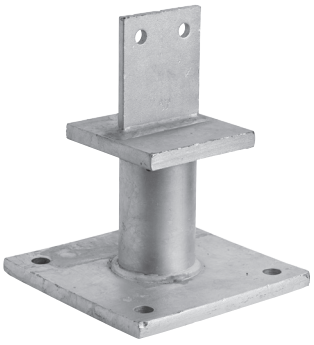

The PISBMAXI is a heavy duty elevated post base to suit various sizes of timber and Glulam posts. Dowels not included. Order separately.

Material: Hot dip galvanised mild steel plate.

- Not recommended for installations where the top of the post/column is not restrained (eg fence posts).

Product Dimensions

References	Timber Post Size [mm]	Dimensions [mm]										Holes	
		A	B	C	D	E	F	G	H	t_1	t_2	Top Plate	Bottom Plate
												Ø13	Ø17
PISBMAXI-B	120x120 - 200x200	120	120	105	200	200	148	70	90	8.0	15.0	2	4

Performance Values

References	Fasteners				Characteristic Capacities – Timber C24 [kN]									
	Post		Concrete		$R_{1,k}$	$R_{2,k}$			$R_{3,k}$			$R_{4,k}$		
						Dowel Length [mm]			Dowel Length [mm]			Dowel Length [mm]		
	Qty	Dowels	Qty	Anchors		120	140	160	120	140	160	120	140	160
PISBMAXI-B	2	Ø12	4	M16	272.2	34.5	38.5	42.1	22.5	20.1	20.1	7.7	9.9	12.3

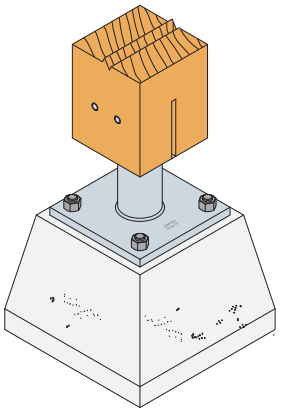

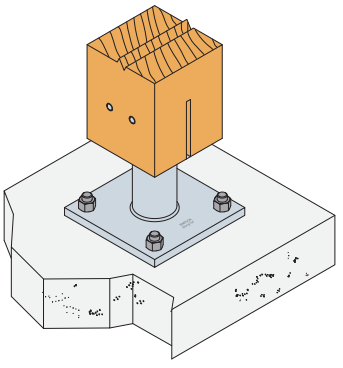

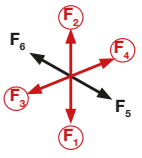

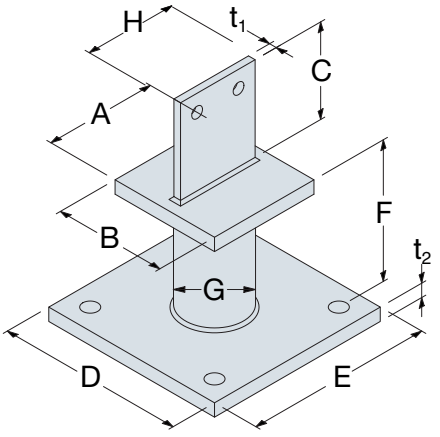

C-C-UK-2023 ©2023 SIMPSON STRONG-TIE COMPANY INC.

PPA Elevated Post Base with 100mm Stand Off

The PPA is for post base installations requiring a higher stand off distance.

Material: Hot dip galvanised mild steel. Stainless steel option available to order.

Installation: Fix to the foundation with concrete screw/mechanical anchor or resin anchor system. Fix to the post using M10 coach screws.

- Not recommended for installations where the top of the post/column is not restrained (eg fence posts).

Product Dimensions

References	Timber Post Size [mm]	Dimensions [mm]							Holes	
		A	B	C	D	E	F	t	Top Plate	Bottom Plate
									Ø12	Ø12
PPA100	100x100 - 200x200	100	100	130	130	Ø48	100	4.0	4	4

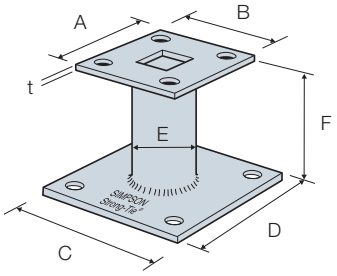

Performance Values

References	Fasteners				Characteristic Capacity [kN] C24 Download
	Post		Concrete		
	Qty	Type	Qty	Anchors	$R_{1,k}$
PPA100	4	M10 Coach Screw	4	M10	85.7

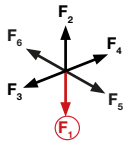

CBQ Post Base (Made to Order)

The CBQ welded post base is for pre-pour concrete applications and is made to order within parameters below.

Material: Hot dip galvanised mild steel.

- Important note: The CBQ is NOT recommended when the top of post/column is not restrained (e.g. fence post).

Installation:

- Use SSH8.0x60 (75136) screws supplied wih the column caps.
- Install SSH screws with a 13mm Hex Head Socket or T40 Torq Drive bit.
- It is recommended that the SSH screws are installed with torque drill driver, not an impact driver.

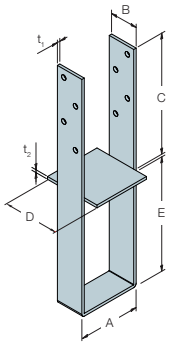

Product Dimensions

References	Timber Post Size [mm]	Product Dimensions [mm]									Holes
		A		B	C	D		E	t_1	t_2	Ø9
		Min	Max			Min	Max				
CBQ	75x75 - 200x200	75	200	50	220	75	200	205	5	5	8

Installation:

1. Position CBQ into pre poured wet concrete so that bottom of the base plate is flush with the top surface of the new foundation (Fig 1)
2. Once the concrete is sufficiently cured place post centrally onto CBQ base plate and prop in place (Fig 2)
3. Install 4 number SSH8.0X60 screws into each upstand flange providing a total of 8 fixings per CBQ (Figs 3 & 4)
4. Continue to build the rest of the timber structure ensuring there is adequately braced to eliminate any moment loads on the post base

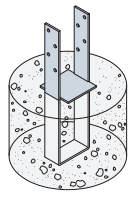

Fig 1: CBQ cast into concrete

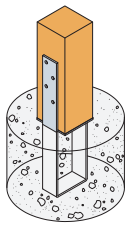

Fig 2: Install timber post

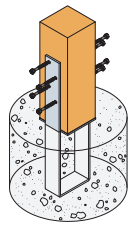

Fig 3: Install SSH screws

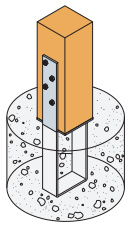

Fig 4: Complete installation

C-C-UK-2023 ©2023 SIMPSON STRONG-TIE COMPANY INC.

PC/EPC Post Cap & End Post Cap

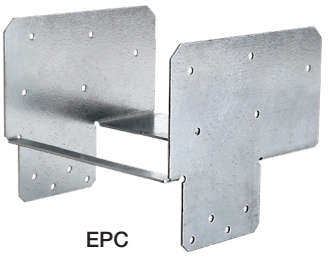

EPC

The PC extension side plates function as tie straps where splices occur. EPC option should be used where the beam ends at the post. Standard connectors for post to beam connections.

Material: Pre-galvanised mild steel.

STN RECOMMENDED FIXINGS

Product Dimensions

References	Post Size [mm]	Dimensions [mm]						Holes	
								Post	Beam
		A	B	C	D	E	t	Ø4.1	Ø4.1
PC4Z	89x89 89x140 89x185	90	178	76	67	41	1.6	8	10
EPC4Z	89x89 89x140 89x185	90	133	76	67	41	1.6	8	10

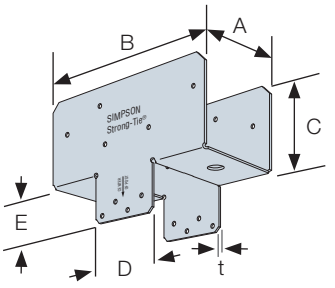

PC

Performance Values

References	Post Size [mm]	Fasteners		Safe Working Loads [kN]	
		Post	Beam		
		N3.75x75	N3.75x75	$R_{2,SWL,Short\ Term}$	$R_{5,k} = R_{6,SWL,Short\ Term}$
PC4Z	89x89	8	10	6.6	5.6
	89x140	8	10	6.6	5.6
	89x185	8	10	6.6	6.1
EPC4Z	89x89	8	10	5.0	4.8
	89x140	8	10	5.0	5.5
	89x185	8	10	5.0	5.5

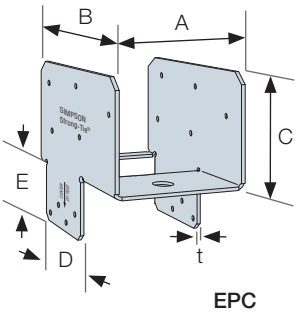

EPC

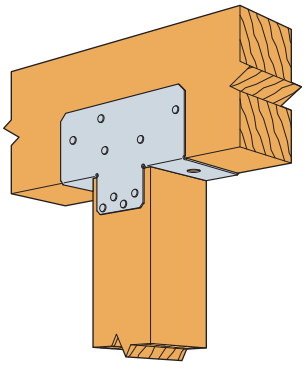

PC

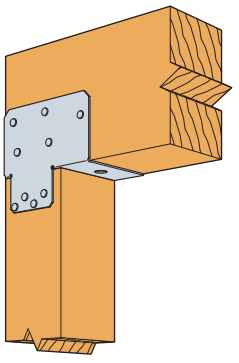

EPC

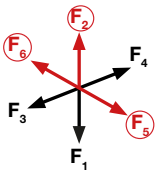

C-C-UK-2023 ©2023 SIMPSON STRONG-TIE COMPANY INC.

CCQ Column Cap (Made to Order)

The CCQ type Column Caps can be made to order for all standard timber or engineered timber sizes.

CCQ Column Caps are suitable for most post to beam installations using SSH8.0X60 connector screws (supplied with the caps).

Specify the variable dimensions as shown in the Column Cap Made to Order Form (see following page).

Material: Hot dip galvanised mild steel.

Installation:

- Use SSH8.0x60 (75136) screws supplied wih the column caps.
- Install SSH screws with a 13mm Hex Head Socket or T40 Torque Drive bit.
- It is recommended that the SSH screws are installed with torque drill driver, not an impact driver.

Product Dimensions

References	Dimensions [mm]									Holes	
	A, A_2, A_3		B	C, C_2, C_3		H		t_{body}	t_{legs}	Body	Legs
	Min	Max		Min	Max	Min	Max			Ø9	Ø9
SPEC E CCQ	75	250	280	140	190	75	250	5.0	5.0	16	8
SPEC E ECCQ	75	250	280	140	190	75	250	5.0	5.0	12	8
SPEC E ECCLLQ	75	250	300	140	190	75	250	5.0	5.0	16	8
SPEC E ECCLRQ	75	250	300	140	190	75	250	5.0	5.0	16	8
SPEC E CCTQ	75	250	300 - 450	140	190	75	250	5.0	5.0	24	8
SPEC E CCCQ	75	250	300 - 450	140	190	75	250	5.0	5.0	32	8

Note: Refer to individual dimensioned drawings (in product gallery) or order form for relevant dimension.
All referenced column cap dimensions are internal

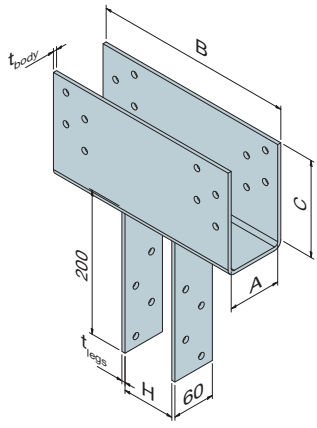

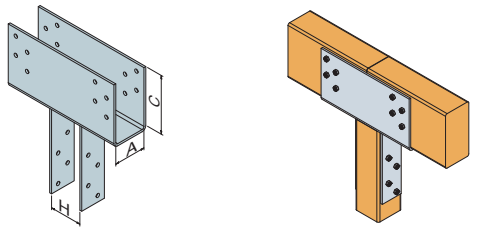

SPEC E CCQ

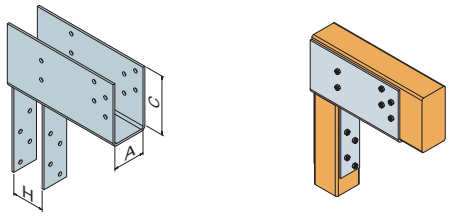

SPEC E ECCQ

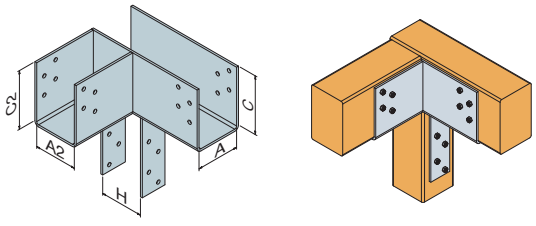

SPEC E ECCLLQ

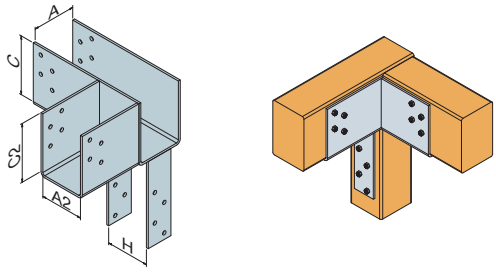

SPEC E ECCLRQ

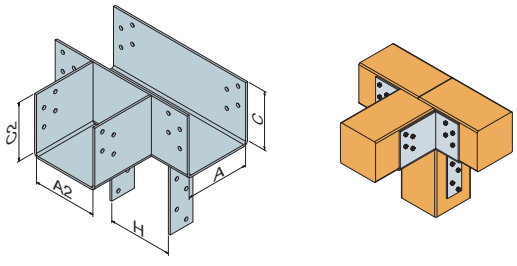

SPEC E CCTQ

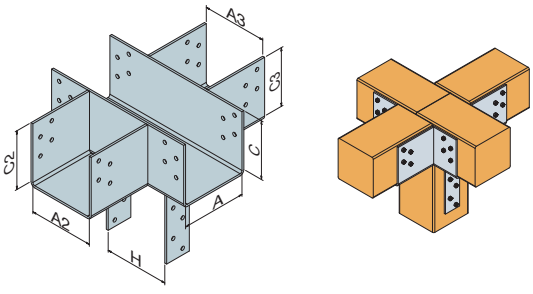

SPEC E CCCQ

C-C-UK-2023 ©2023 SIMPSON STRONG-TIE COMPANY INC.

CCQ Column Cap Made to Order Form

Name:	**Tel:**
Email:	
Make a note of the dimensions (in millimeters) next to the relevant product diagram below. Email the form to: UKsales@strongtie.com	

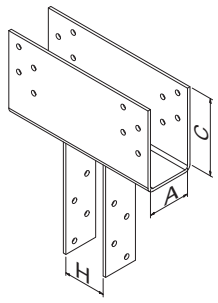

SPEC E CCQ ☐

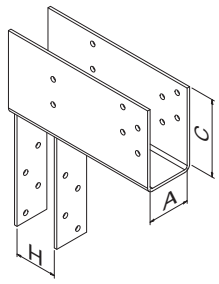

SPEC E ECCQ ☐

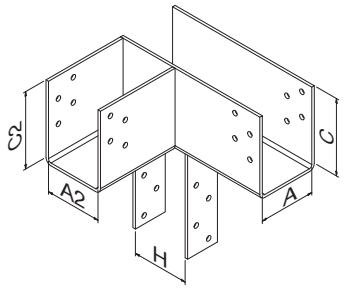

SPEC E ECCLLQ ☐

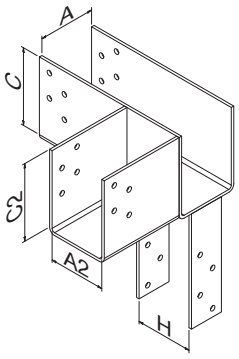

SPEC E ECCLRQ ☐

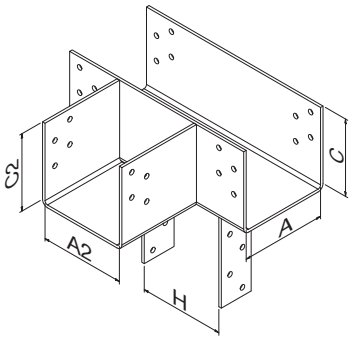

SPEC E CCTQ

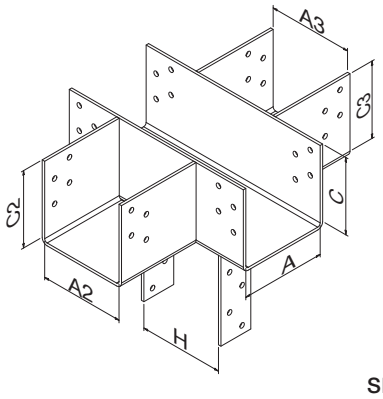

SPEC E CCCQ

Reference dimensions	Available range	Required size
A (W1)	75 - 225mm	
C (H1)	140 – 190mm	
H (W2)	75 - 250mm	
A (W1)	75 - 225mm	
A2 (W3)	75 - 225mm	
C (H1)	140 – 190mm	
C2 (H2)	140 – 190mm	
H (W2)	75 - 250mm	
A (W1)	75 - 225mm	
A2 (W3)	75 - 225mm	
C (H1)	140 – 190mm	
C2 (H2)	140 – 190mm	
H (W2)	75 - 250mm	
A (W1)	75 - 225mm	
A2 (W3)	75 - 225mm	
A3 (W4)	75 - 225mm	
C (H1)	140 – 190mm	
C2 (H2)	140 – 190mm	
C3 (H3)	140 – 190mm	
H (W2)	75 - 250mm	

C-C-UK-2023 ©2023 SIMPSON STRONG-TIE COMPANY INC.

C-C-UK-2023 ©2023 SIMPSON STRONG-TIE COMPANY INC.

12 Post Bases & Column Caps

HES/LES Heavy/Light Engineered Restraint Straps

Patent GB 2423532

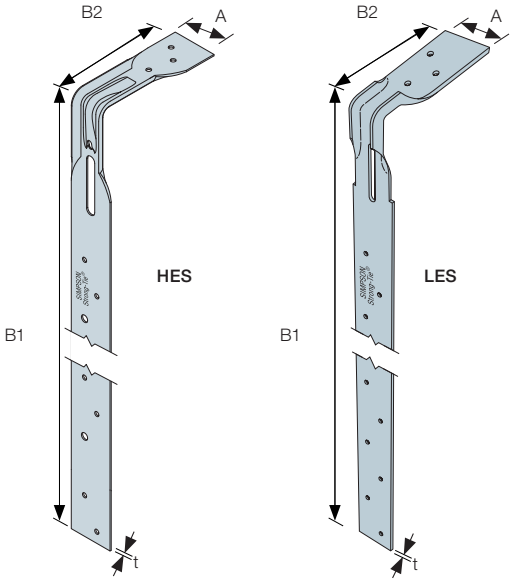

A direct replacement for traditional restraint straps, the innovative design of these lightweight straps allows ease of handling and installation whilst maintaining the structural strength and robustness of much heavier weight types.

The HES (heavy engineered strap) & LES (light engineered strap) replace traditional heavy and light restraint straps in roof and floor construction.

Reducing the thickness to 1.2mm allows the HES strap to span the bottom chords of trusses and over floor joists without the need for notching.

HES straps are less than 40% of the weight, quicker to fit, and overcome many fixing problems associated with traditional heavy straps.

The LES is designed for vertical applications e.g. holding down wall plates.

- Formed edge design gives additional strength on bend.
- Quicker to install - can fit over top of floor joists and truss bottom chords.
- Easier to course with blockwork.
- No need to notch joists.

Material: Pre galvanised mild steel

Horizontal strap installation: Approved Document A of the Building Regulations requires lateral restraint to be provided at each floor at a maximum of 2 metre centres.

Restraint straps "perpendicular" to the floor joists are required to be held tight against the masonry and fixed across the first 3 joists.

Restraint straps "parallel" to the floor joists are required to be held tight to the masonry and be at least 1200mm long.

The characteristic tensile strength for horizontal restraint straps should not be less than 8kN.

Vertical strap installation: Vertical strapping, at least 1 metre in length, should be provided at eaves level to hold down timber wall plates, at intervals not exceeding 2 metres.

STN RECOMMENDED FIXINGS

C-C-UK-2023 ©2023 SIMPSON STRONG-TIE COMPANY INC.

Product Dimensions

References	Installation Type	Dimension [mm]				Holes		
						Flange B2	Flange B1	
		A	B1	B2	t	Ø4.1	Ø4.1	Ø6.1
HES06B10	Horizontal	38	500	100	1.2	3	8	8
HES08B10		38	700	100	1.2	3	12	12
HES10B10		38	900	100	1.2	3	16	16
HES12B10		38	1100	100	1.2	3	20	20
HES15B10		38	1400	100	1.2	3	26	24
LES06B10	Vertical	35	500	100	1.2	3	8	8
LES08B10		35	700	100	1.2	3	12	12
LES10B10		35	900	100	1.2	3	16	16
LES12B10		35	1100	100	1.2	3	20	20

Bent Strap Performance Value

References	Fasteners			Characteristic Load [kN]
	Masonry Wall	Floor Joist or Rafter	Wall Plate	
HES	-	8 - N3.75x30	-	8.0
LES	5 - 5.5x50mm Wood Screw	-	3 - N3.75x30	4.0

- Wood screws are to be plugged and screwed in the masonry. The lowest fixing shall be within 150mm of the bottom of the strap.

Restraint Straps Guide

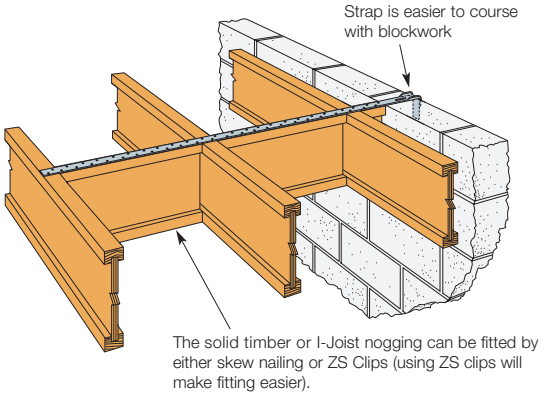

The HES strap can be fitted over joists without the need to notch the web or flange.

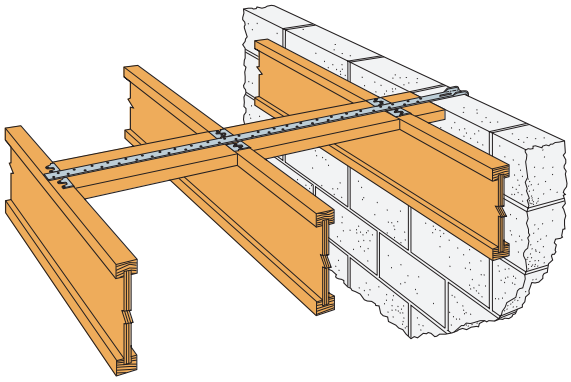

The HES strap can be used in conjunction with solid timber noggings.

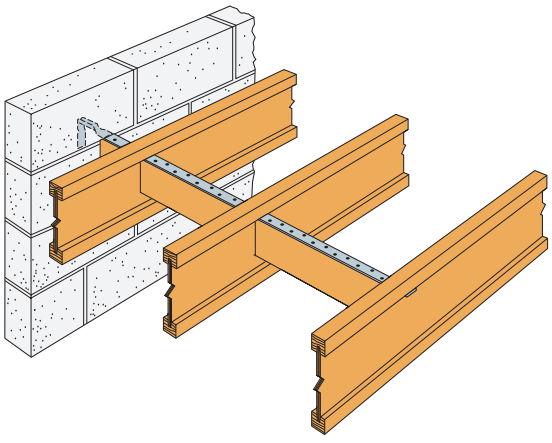

The HES or H strap can also be fitted underneath the top flange of the I-Joist.

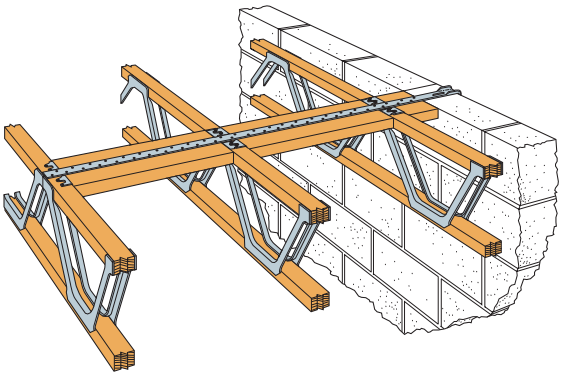

The HES strap can be fitted over metal web joists without the need to notch the flange.

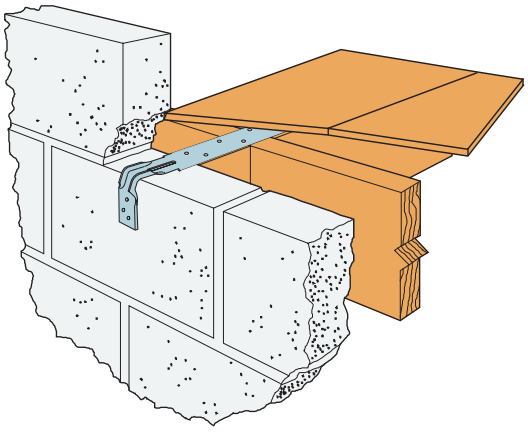

HES strap used in conjuntion with solid timber joists.

Installation:

Horizontal lateral restraint straps should be spaced not more than 2m centres and attached to at least 3 timber members through the use of noggings and packing.

Attach to timber members using a minimum of 8 No 3.75 x 30mm square twist nails. The bend length should be a minimum of 100mm and should be positioned at the centre of an uncut block or brick.

The downturn of strap is to be held tight against the cavity face of the inner leaf of blockwork.

C-C-UK-2023 ©2023 SIMPSON STRONG-TIE COMPANY INC.

H/L Heavy/Light Restraint Straps

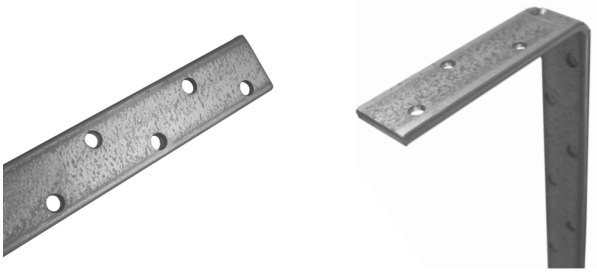

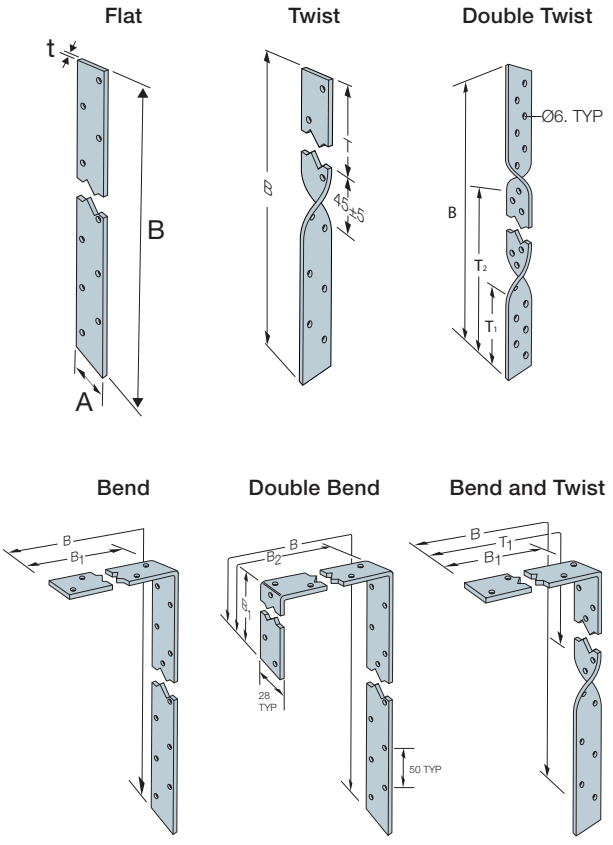

The H and L straps are designed to The Building Regulations for horizontal and vertical restraint.

- Heavy restraint straps meet requirements for lateral restraint of roof trusses, rafters and joists tied into masonry walls.
- Light restraint straps are designed for vertical loads such as wall plates on top of masonry walls.
- All common sizes in stock from 500 to 2000mm long, 100mm increments. Longer lengths avaialble to order, contact techincal support.

Material: Pre-galvanised mild steel.
SS Stainless Steel straps are available, to order.

Installation: Use all specified fasteners.

- Horizontal lateral restraint straps should be spaced not more than 2m centres and attached to at least 3 timber members through the use of noggings and packing. Attach to timber members using specified fasteners. The bend length should be a minimum of 100mm and should be positioned at the centre of an uncut block or brick.
- Vertical restraint strapping should be at least 1m long. Where straps are fixed to masonry, hardened nails Ø4mm x 75mm long or wood screws into plastic plugs Ø5.0 x 50mm long should be used. The lowest fixing should be located within 150mm of the bottom of the vertical strap.

Non standard straps are available to order.

To order: Specify model series, overall length, bend (B) dimension and/or twist (T) dimension.

Example: Heavy strap that has an overall length of 1m, a bend at 10cm and a twist at 20cm (see illustration for detail on measuring bend & twist dimensions).

H	10	B10	T20
Strap Type	Strap Length (dm)	Bend Length (cm)	Twist Length (cm)

Common Bent Strap

References	Installation Type	Dimension [mm]				Holes	
						Total	Flange B1
		A	B	B_1	t	Ø6	Ø6
H06B10	Horizontal	28	600	100	4.0	23	3
H08B10		28	800	100	4.0	31	3
H10B10		28	1000	100	4.0	39	3
H12B10		28	1200	100	4.0	47	3
H15B10		28	1500	100	4.0	59	3
H16B10		28	1600	100	4.0	63	3
H06B15		28	600	150	4.0	23	5
H08B15		28	800	150	4.0	31	5
H10B15		28	1000	150	4.0	39	5
H12B15		28	1200	150	4.0	47	5
H15B15		28	1500	150	4.0	59	5
H16B15		28	1600	150	4.0	63	5
L06B10	Vertical	27	600	100	2.0	23	3
L08B10		27	800	100	2.0	31	3
L10B10		27	1000	100	2.0	39	3
L12B10		27	1200	100	2.0	47	3

Common Twisted Strap

References	Dimension [mm]				Holes	
					Total	Flange T1
	A	B	t_1	t	Ø6	Ø6
H06T15	28	600	150	4.0	22	6
H10T15	28	1000	150	4.0	38	6
L06T10	27	600	100	2.0	22	4
L10T10	27	1000	100	2.0	38	4
L12T10	27	1200	100	2.0	46	4
L12T15	27	1200	150	2.0	46	6

Common Flat Strap

References	Dimension [mm]			Holes
				Total
	A	B	t	Ø6
H10F00	28	1000	4.0	40
H12F00	28	1200	4.0	48
L10F00	27	1000	2.0	40
L12F00	27	1200	2.0	48

Bent Strap Performance Value

References	Fasteners			Characteristic Load [kN]
	Masonry Wall	Floor Joist or Rafter	Wall Plate	
HxxBxx	-	8 - N3.75x30	-	8.0
LxxBxx	5 - 5.5x50mm Wood Screw	-	3 - N3.75x30	4.0

- Wood screws are to be plugged and screwed in the masonry. The lowest fixing shall be within 150mm of the bottom of the strap

C-C-UK-2023 ©2023 SIMPSON STRONG-TIE COMPANY INC.

Restraint Straps Guide

Roof Applications

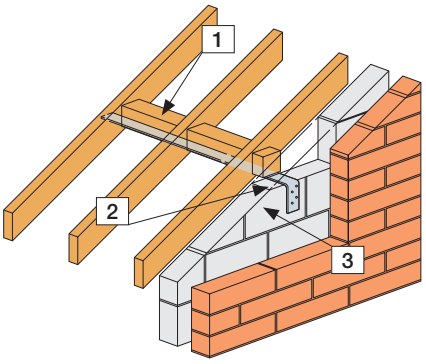

Fixing to Solid Noggings

- Straps to be installed at not more than 2m centres (or 1.25m where appropriate) along pitch of gable end.
- Ensure the position of the straps coincides with the block bed joint.
- Install HES or H strap to underside of solid noggings. Noggings to be fixed horizontally to avoid twisting of the restraint straps. (**1**)
- The downturn of strap is to be held tight against the cavity face of the inner leaf of blockwork (**2**), preferably located and bedded on a substantial piece of blockwork, i.e. over the centre of a full block, with a single cut block over the strap. (**3**)
- Fix straps to noggings/trusses with 8 No 3.75 x 30mm square twist nails, evenly distributed along the length of the strap. (For NHBC warrantied buildings, in accordance with NHBC Standards 2017, section 7.2.8, 4 No 50mm (minimum) x 4mm steel screws or 4 No 75mm x 4mm round wire nails, with one fixing into the third rafter, shall be used instead of the square twist nails).
- Strap to be of sufficient length to be fixed to a minimum of three trusses.

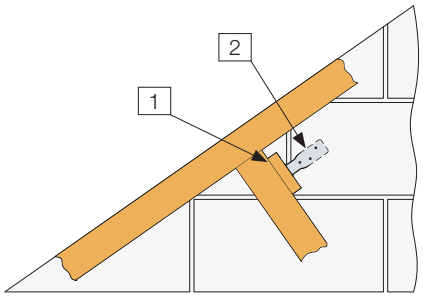

Fixing to Longitudinal Binder to Truss Web

- Straps to be installed at not more than 2m centres (or 1.25m where appropriate) along pitch of gable end
- Install HES or H strap on the 25 x 100mm longitudinal Web bracing (1)
- Where the position of the strap does not coincide with an existing longitudinal binder, then the strap may be fixed to an additional 25 x 100mm binder, as shown in the detail below. The binder is to be fixed over four trusses and nailed twice to each rafter with 3.35 x 65mm round wire nails.
- The downturn of strap is to be held tight against the cavity face of the inner leaf of blockwork (2), preferably located on the full block. Notch the blocks to accommodate the twist of the strap and ensure notch is fully mortared.
- Fix straps to bracing with 8 No 3.75 x 30mm square twist nails, evenly distributed along the length of the strap (For NHBC warrantied buildings, in accordance with NHBC standards 2017, section 7.2.8, 8 No 25mm x 4mm steel screws shall be used instead of the square twist nails).
- Strap to be of sufficient length to be fixed to a minimum of three trusses.

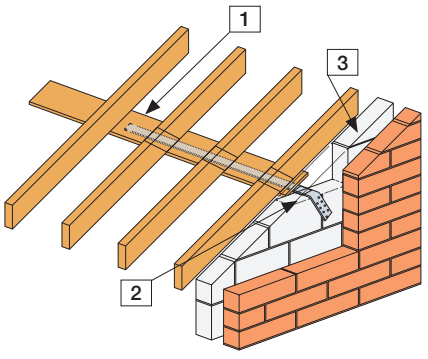

Fixing to Longitudinal Binder to Truss Rafter

- Straps to be installed at not more than 2m centres (or 1.25m where appropriate) along pitch of gable end.
- Install HES or H strap on the 25 x 100mm longitudinal Rafter bracing (1)
- Where the position of the strap does not coincide with an existing longitudinal binder, and block bed joint, then the strap can be fixed to an additional 25 x 100mm binder. The binder is to be fixed over four trusses and nailed twice to each rafter with 3.35 x 65mm round wire nails.
- Ensure the position of the additional binder and strap coincide with the block bed joint
- The downturn of strap is to be held tight against the cavity face of the inner leaf of blockwork (2), preferably located and bedded on a substantial piece of blockwork, i.e. over the centre of a full block, with a single cut block over the strap (3) (notch the block to accommodate the twist of the strap and ensure notch is fully mortared).
- Fix straps to bracing with 8 No 3.75 x 30mm square twist nails, evenly distributed along the length of the strap (For NHBC warrantied buildings, in accordance with NHBC Standards 2017, section 7.2.8, 8 No 25mm x 4mm steel screws shall be used instead of the square twist nails).
- Strap to be of sufficient length to be fixed to a minimum of three trusses.

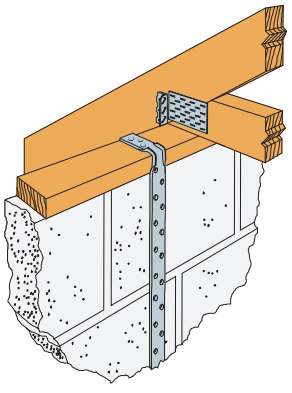

LES or L Strap to Wall Plate

Vertical Application:

Fix LES or L strap to wall plate with 3 No 3.75 x 30mm square twist nails and to masonry with 5 No 5.5 x 50mm wood screws, plugged and screwed into masonry.

The lowest fixing should be located within 150mm of the bottom of the vertical strap.

Where L strap is fixed to truss, install with 3.75 x 30mm square twist nails, quantity depending on required uplift values.

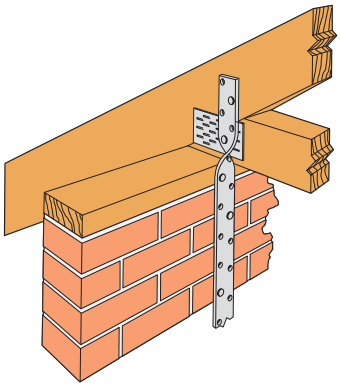

Twisted L Strap to Truss

C-C-UK-2023 ©2023 SIMPSON STRONG-TIE COMPANY INC.

EC-UK-2023 ©2023 SIMPSON STRONG-TIE COMPANY INC.

Restraint Strap Order Form

Name:	Tel:
Email:	
Make a note of the dimensions (in millimetres) next to the relevant product diagram below. Indicate strap thickness (heavy or light option). Email the form to: UKsales@strongtie.com	

Flat 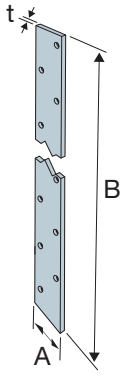	**Heavy (H) Option** ☐ **Light (L) Option** ☐
	Length (B) mm:
Flat with Twist 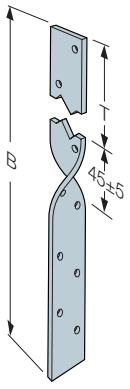	**Heavy (H) Option** ☐ **Light (L) Option** ☐
	Length (B) mm:
	Start of Twist (T) at mm:
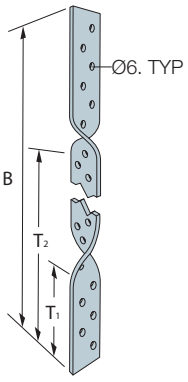 Flat with Double Twist	**Heavy (H) Option** ☐ **Light (L) Option** ☐
	Length (B) mm:
	Start of Twist 1 (T1) at mm:
	Start of Twist 2 (T2) at mm:

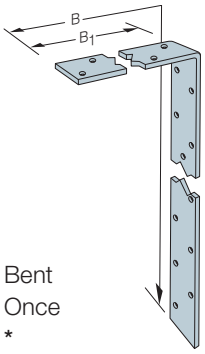 Bent Once *	**Heavy (H) Option** ☐ **Light (L) Option** ☐
	Length (B) mm:
	Bend (B1) at mm:
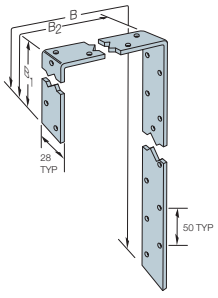 Bent Twice *	**Heavy (H) Option** ☐ **Light (L) Option** ☐
	Length (B) mm:
	Bend 1 (B1) at mm:
	Bend 2 (B2) at mm:
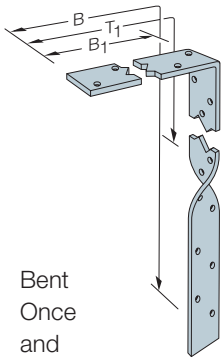 Bent Once and Twisted Once *	**Heavy (H) Option** ☐ **Light (L) Option** ☐
	Length (B) mm:
	Bend (B1) at mm:
	Start of Twist (T1) at mm:

Please note:

***** Dimensions always taken from the same start point.

Heavy Strap (H) width x thickness: 28mm x 4mm. **Light Strap** (L) width x thickness: 27mm x 2mm

Light straps are available in 30mm x 2mm stainless steel (SS304), by ordering an LSSX strap.

Length dimensions are in 50mm increments. Bends and twists are in 25mm increments.

C-C-UK-2023 ©2023 SIMPSON STRONG-TIE COMPANY INC.

FMS Folded Mini Strap

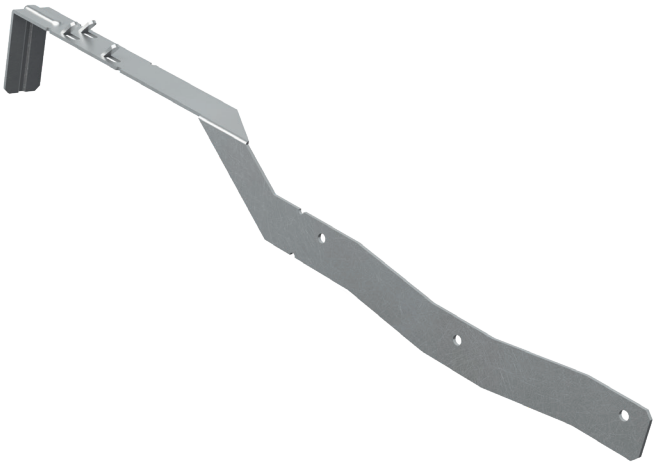

The FMS strap range provides restraint to masonry walls when the walls are supporting joist ends. They make installation easier, quicker and more cost effective - without compromising on wall stability.

In place of the traditional heavy strap at 2.0m c/c spacing, the FMS strap is installed to provide restraint at every joist end, whether built in or on hangers. So there's no need to calculate where the straps go, or worry about getting one in the wrong place. Every job gets done quicker and more smoothly.

The FMS strap goes on every joist end up to 600mm c/c spacing, and blockwork up to 125mm thick.

Material: Pre-galvanised mild steel.

- Ideal solution for 2½ & 3 storey buildings which require straps on joist ends when built in to masonry walls or on hangers.
- Improves quality of build.
- Saves time and labour costs.
- Greatly reduces scope for installation errors.
- Simplifies on-site inspection process.

STN RECOMMENDED FIXINGS

Product Dimensions

References	Dimensions [mm]					Holes
	A	B	C	D	t	Ø4
FMS	40	375	135	20	1.5	3
FMSB	40	375	135	20	1.5	3
FMSC	40	375	135	20	1.5	3

Performance Values

References	Fasteners		Characteristic Load [kN]
	Masonry Wall	Floor joist	
FMS	-	3 - N3.75x30	2.4

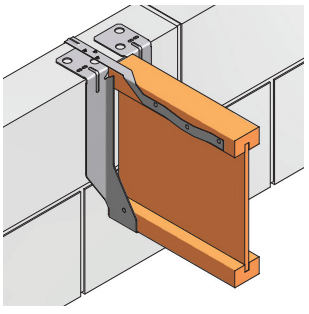

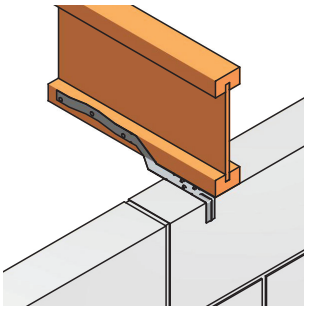

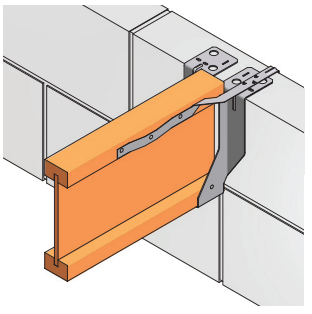

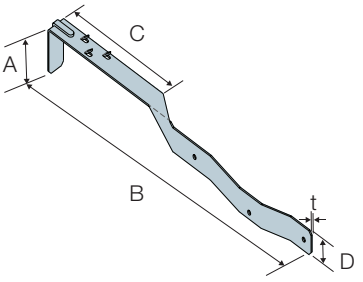

FMS - For use where the joist and hanger are the same height:
1. Place carried joist into hanger, securing joist into the hanger by installing all specified fixings.
2. Sit FMS strap on top of joist as shown above, ensuring the return is hooked over supporting masonry and is tight against outer face of masonry.
3. Install 3 No 3.75x30mm square twist nails into the side of joist.
4. Build remaining block work above joist and strap.

FMSB - For use in conjunction with joists built into walls:
1. Sit joist onto blockwork, ensuring that joist is fully bearing onto supporting masonry.
2. Fit FMSB strap to side of joist at the bottom as shown above, ensuring the return is hooked over supporting masonry and is tight against outer face of the masonry.
3. Install 3 No 3.75x30 square twist nails through holes into side of joist.
4. Build remaining blockwork between and above joist and strap. See note 2.

FMSC - For use with coursing masonry hangers:
1. Place carried joist into hanger, securing joist into the hanger by installing all specified fixings.
2. Fit FMSC strap to side of joist as shown below, ensuring the return is hooked over supporting masonry and is tight against outer face of the masonry.
3. Install 3 No 3.75x30mm square twist nails through holes into the side of joist.
4. Build remaining block work above joist and strap

Notes:
1. All joist ends require a folded mini strap.
2. Standard masonry hangers require a minimum of 3 courses (675mm) of blockwork with mortar fully cured before applying a load to the floor.

C-C-UK-2023 ©2023 SIMPSON STRONG-TIE COMPANY INC.

HSA Herringbone Strut

The HSA is a superior alternative to unreliable, slow and costly timber struts. Meets bracing requirements for long span domestic floors.

Material: Pre-galvanised mild steel.

Installation:

- Use all specified fasteners.
- Generally required at centre of span when floor joists exceed 2.5 metres. Spans exceeding 4.5 metres require two rows spaced at 1/3 and 2/3 span.
- HSA come sized to suit joist centre spacing of 400, 450 & 600mm.

STN RECOMMENDED FIXINGS

Product Dimensions

References	Dimensions [mm]					Holes	
	A	B	C	D	t	End C	End D
						Ø4.1	Ø4.1
HSA400	27	480	53	53	1.0	4	4
HSA450	27	530	53	53	1.0	4	4
HSA600	27	660	53	53	1.0	4	4

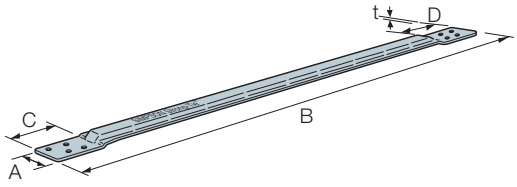

Selection guide

Joist Size [mm]	References			Fasteners	
	Joist Spacing [mm]			End C	End D
	400	450	600	N3.75x30	N3.75x30
50x175	HSA400	HSA450	HSA600	2	2
50x200	HSA400	HSA450	HSA600	2	2
50x225	HSA400	HSA450	HSA600	2	2

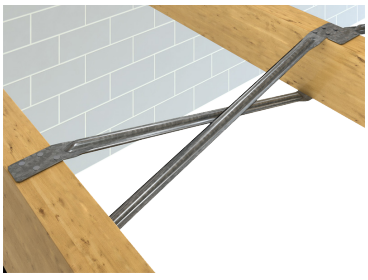

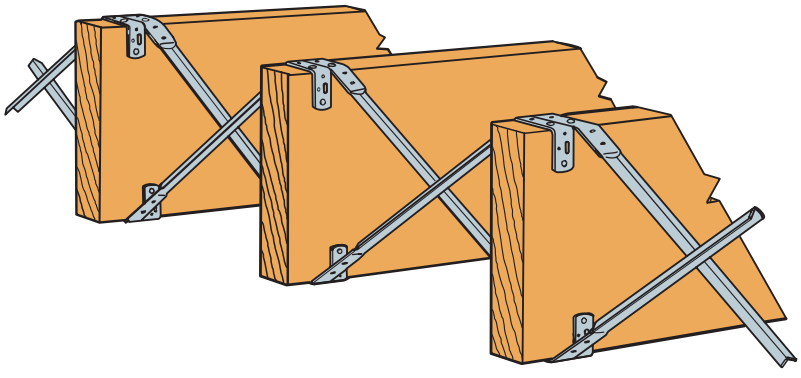

Standard HSA Installation

C-C-UK-2023 ©2023 SIMPSON STRONG-TIE COMPANY INC.

LSTA Strap Tie

The LSTA strap tie is used where tension connections are required. Commonly used as ridge ties and at wall intersections.

Material: Pre-galvanised mild steel.

Installation: Use all specified fasteners.

- Members must have the same number of installed nails at each end, otherwise the load is limited by the least number of nails in either member.

STN RECOMMENDED FIXINGS

Product Dimensions

References	Dimensions [mm]			Holes	
	A	B	t	Ø4.1	Ø12
LSTA9	32	228	1.0	8	2
LSTA12	32	304	1.0	10	2
LSTA18	32	457	1.0	14	2
LSTA24	32	610	1.0	18	2

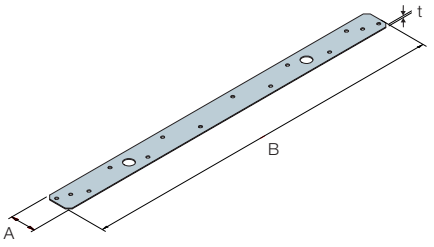

Performance Values

References	Fasteners	Safe Working Tension [kN]	Characteristic Tensile Capacity [kN]
	N3.75x30	N3.75x30	N3.75x30
LSTA9	8	1.4	5.1
LSTA12	10	1.8	5.1
LSTA18	14	2.5	5.1
LSTA24	18	3.2	5.1

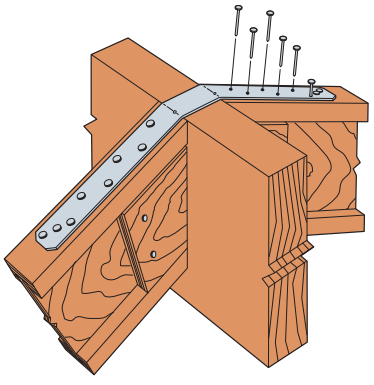

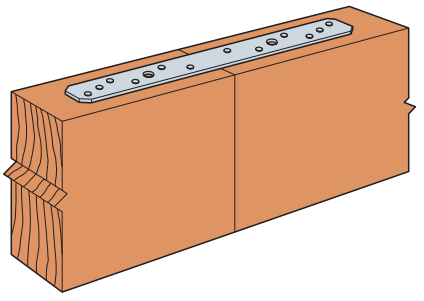

C-C-UK-2023 ©2023 SIMPSON STRONG-TIE COMPANY INC.

FB Fixing Band

The FB fixing band is for all general light strapping needs. Perfect for DIY, industrial and agricultural applications. Comes in convenient 10 metre rolls.

FB20 fixing band is supplied in a plastic dispenser, which keeps it secure making it much easier to unroll. Suitable for all general light strapping applications.

Material: FB20: Pre-galvanised mild steel.
FB20S: Stainless steel.

Installation:

- FB can be easily bent or twisted for many versatile installations.
- Install FB20S using stainless steel fasteners.

Product Dimensions

References	Dimensions [mm]			Holes [mm]	
	Width	Length [m]	t	Round	Square
FB20	20	10	0.9	Ø4 & Ø7	7x7
SS FB20S	20	10	1.0	Ø4 & Ø6.5	-

Performance Values

References	Strap Characteristic Capacity [kN]
FB20	3.0
FB20S	5.0

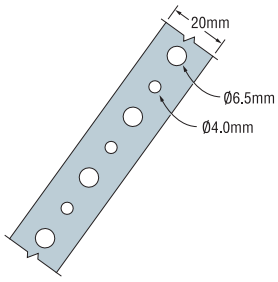

FB20S

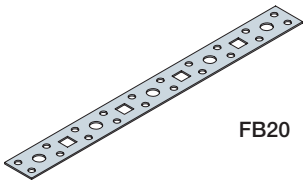

FB20

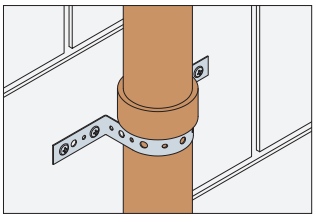

BAN Fixing Band

NEW

BAN09

BAN fixing bands are suited to a wide range of applications, especially for butt joints, post & beam connections, CLT panel assemblies and connections where nail plates need to be folded on site.

Material: BAN: Pre-galvanised mild steel
BANS: Stainless steel

Advantages:

- Flexible installation
- Resistance to uplift forces

BAN

Product Dimensions

References	Dimensions [mm]			Holes [mm]	Characteristic Tensile Capacity $R_{1,st}$ [kN]
	Width	Length [m]	t	Round	
BAN094025	40	25	0.9	Ø5	17.8
BAN102003	20	3	1.0	Ø5	4.0
BAN102010	20	10	1.0	Ø5	4.0
SS BAN102010S	20	10	1.0	Ø5	4.0
BAN102025	20	25	1.0	Ø5	4.0
BAN152010	20	10	1.5	Ø5	6.0
BAN152025	20	25	1.5	Ø5	6.0

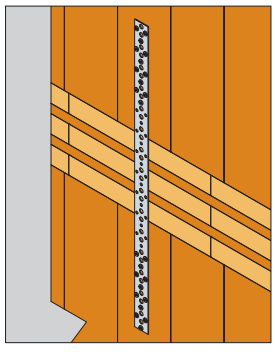

The maximum characteristic value tolerated under tensile load corresponds to the plate's maximum tensile strength. The fasteners must be checked separately using EN 1995-1-1.
The characteristic resistance of an BAN fixing band assembly under tensile load $R_{1.k}$ is: $R_{1.k} = min\ (R_{1.st}; R_{upper}; R_{lower})$

Where:
$R_{1.st}$: the maximum characteristic value tolerated under tensile load as specified in the table above.
R_{upper}: the resistance of the group of fasteners in the upper wall R_{lower}: the resistance of the group of fasteners in the lower wall
$R_{upper} = n_{ef.upper} \times R_{lat.k}$ $R_{lower} = n_{ef.lower} \times R_{lat.k}$

Where:
$n_{ef.upper}$: the effective number of fasteners in the upper wall $n_{ef.lower}$: the effective number of fasteners in the lower wall
$R_{lat.k}$: the strength of the chosen fastener

Example: BAN094025 joining two CLT walls with an intermediate floor. The aim is to determine the fixing band's load-bearing capacity when subjected to tensile forces.
The nailing pattern shown below is used. The following table provides the characteristic strength values.

C-C-UK-2023 ©2023 SIMPSON STRONG-TIE COMPANY INC.

LTS Twisted Strap Ties

Restraint strap with a formed twist for timber to timber and timber to masonry connections. The LTS1400E is suitable for use in providing lateral/vertical restraint for timber gable panels.

Material: Pre-galvanised mild steel.

General Installation:

- Unless otherwise specified the building designer or structural engineer is to specify the type and quantity of fasteners to be installed, depending on the loading requirements.
- The quantity, type and/or size of fixings, spacings, edge distances and fixing substraits will dictate the capacity of each end of the strap. The lesser of these or the capactiy of the strap itself dictates the final capacity.

Product Dimensions & Performance Values

References	Dimensions [mm]				Holes				Strap Characteristic Tensile Capacity [kN]
	A	B	C	t	Ø4	Ø5	Ø6	Ø9.5	
LTS18	32	457	194	1.2	26	-	-	2	2.9
LTS1400E	38	1400	225	1.5	14	8	14	-	8.0

1. LTS18 fixings quantity and type are to be specified by building designer / structural engineer, unless otherwise stated.

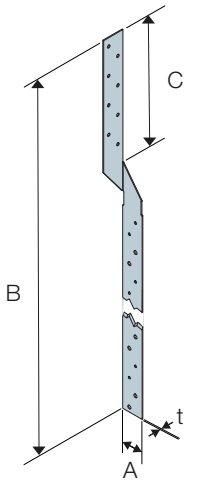

LTS1400E – Lateral Restraint

Fixing to Truss Rafter Longitudinal Bracing / Binder:

- LTS1400E is to be fixed to a 25mmx100mm longitudinal truss bracing.
- In instances where position of strap does not coincide with existing longitudinal bracing, the strap can be fixed to an additional 25mm x 100mm binder. The binder is to be fixed over four trusses and nailed twice to each truss bottom chord with 3.35x65mm round wire nails.
- Ensure the position of the additional binder and strap coincide with the gable panel vertical timber stud.
- LTS1400E is to be fixed to the side of the gable panel vertical stud with a minimum of 3 No 3.75x30mm square twist nails.
- LTS1400E is to be fixed to the bracing / binder with 8 No 3.75x30mm square twist nails, evenly distributed along the length of the strap. (For NHBC warrantied buildings, in accordance with NHBC Standards, 8 No 25mmx4mm steel screws, shall be used instead of the square twist nails).
- The strap is to be of sufficient length to be fixed to a minimum of three trusses.

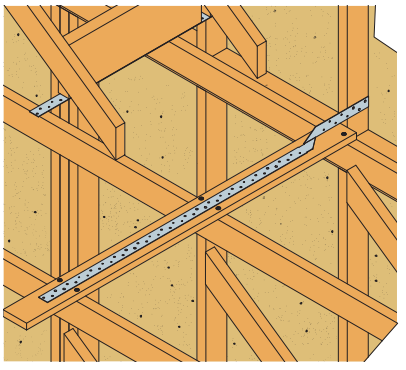

LTS1400E – Lateral Restraint

Fixing to Solid Noggings:

- LTS1400E is to be fixed to the side of the gable panel vertical stud with a minimum of 3 No 3.75x30mm square twist nails.
- LTS1400E is to be fixed to the noggings / trusses with 8 No 3.75x30mm square twist nails, evenly distributed along the length of the strap. (For NHBC warrantied buildings, in accordance with NHBC Standards four 50mm (minimum) x4mm steel screws or 4 No 75mmx4mm round wire nails, with one fixing into the third rafter, shall be used instead of the square twist nails).
- The strap is to be of sufficient length to be fixed to a minimum of three trusses.

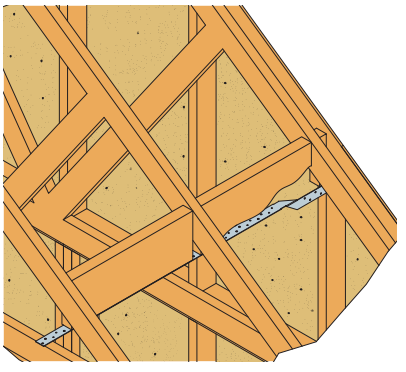

C-C-UK-2023 ©2023 SIMPSON STRONG-TIE COMPANY INC.

LTS Twisted Strap Ties

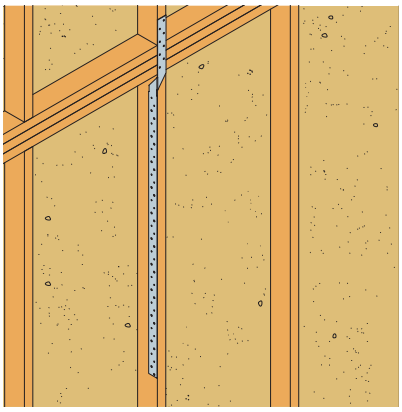

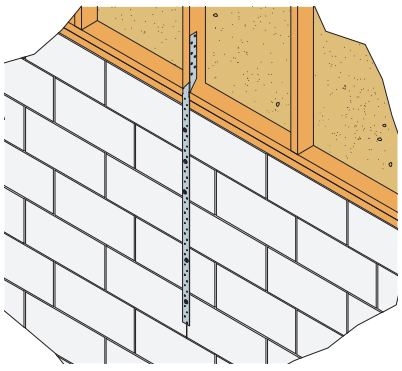

LTS1400E – Vertical Restraint

Fixing to Timber Frame Walls:

- LTS1400E is to be fixed to the face of the gable panel vertical stud with 3.75x30mm square twist nails.
- LTS1400E is to be fixed to the side of the timber frame panel vertical stud with 3.75x30mm square twist nails, evenly distributed along the length of the strap.
- The number of fixings should be in accordance with the design requirements and the lowest fixings should be located within 150mm of the bottom of the strap.

Fixing to Timber/Masonry Walls:

- LTS1400E is to be fixed to the side of the gable panel vertical stud with 3.75x30mm square twist nails.
- LTS1400E is to be fixed to the face of the masonry with either Ø4mmx75mm hardened nails, or Ø5.5mmx50mm wood screws into plugs.
- The number of fixings should be in accordance with the design requirements and the lowest fixings should be located within 150mm of the bottom of the strap.

MTS Twisted Strap Ties

Twist straps provide tension resistance for timber to timber connections.

Material: Pre-galvanised mild steel.

General Installation:

- The building designer or structural engineer is to specify the type and quantity of fasteners to be installed, depending on the loading requirements.
- The quantity, type and/or size of fixings, spacings, edge distances and fixing substraits will dictate the capacity of each end of the strap. The lesser of these or the capactiy of the strap itself dictates the final capacity.

Product Dimensions & Performance Values

References	Dimensions [mm]				Holes		Strap Characteristic Tensile Capacity [kN]
	A	B	C	t	Ø4	Ø9.5	
MTS12	32	305	117	1.5	14	2	4.0
MTS20	32	508	219	1.5	30	2	4.0
MTS30	32	762	219	1.5	35	2	4.0

1. Characteristic Tensile Capacity is the capacity of the strap only.
2. Fixings quantity and type are to be specified by building designer / structural engineer.

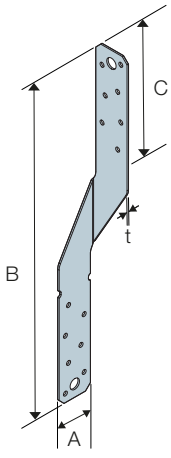

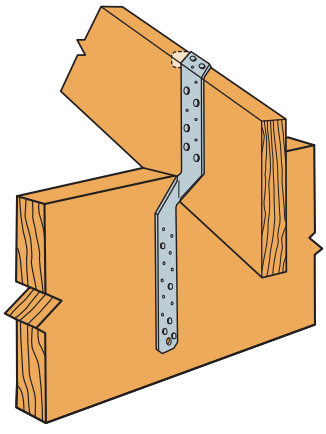

C-C-UK-2023 ©2023 SIMPSON STRONG-TIE COMPANY INC.

C2K Crocodile Wall Extension Profile

The C2K is the UK's most popular solution to the tying-in of new walls to existing masonry walls/columns. The only system with "snap out" ties which can be positioned anywhere along the channel for a universal fit.

The C2K Crocodile Wall Starter is a quality engineered wall connector system that has been developed for use with most brick and block modules. This system has been designed for multi-purpose use where reliability and durability are important requirements. It provides lateral support to masonry wall panels in conversion, extension and new building work.

- BBA Approved for up to 8m, 3 storey work.
- Accommodates 10mm of vertical movement.
- Adjustable anchor ties to accommodate variation in brick courses.
- All fixings and ties provided within the packs.

The multi-purpose 'no flange profile' that has been designed to cater for brick and block walls of widths from 60 to 250mm. Ideal for internal and external applications where both sides of the new wall are to be fair faced.

Material: Stainless Steel Profiles: Austenitic stainless steel - 2 x 1118mm profiles.
Coach Screws: M6 x 50mm
Masonry Plugs: High density polythene.

Product Dimensions

References	Material	Dimensions [mm]	
		Width	Overall Length
C2KS	Stainless Steel	33	2236

Performance Values

References	Wall Thickness	Fasteners	Shear Strength [kN]
		M6x50	
C2KS	60 - 250	6	3.5

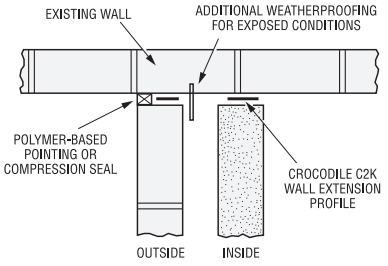

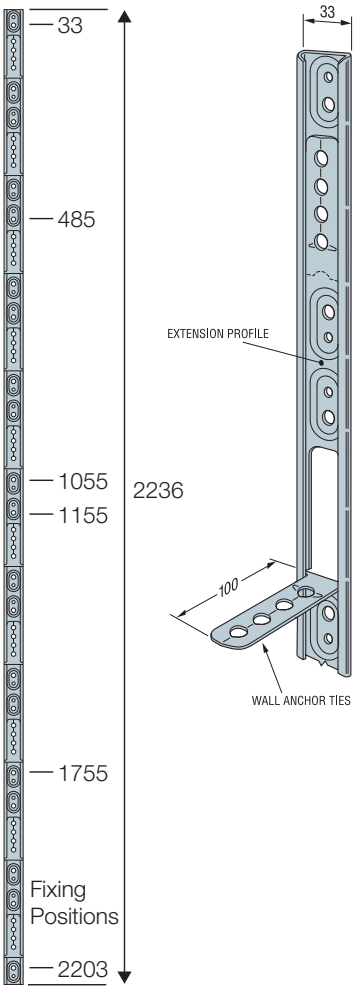

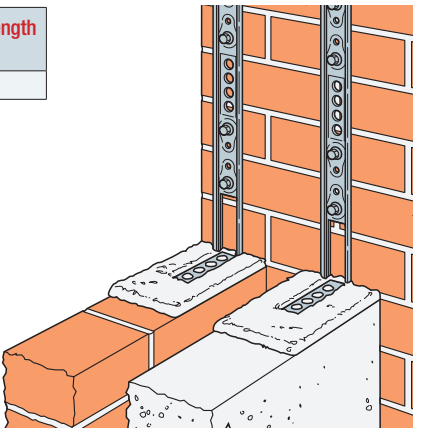

Typical C2K Installation.
The appropriate fixings and fastenings are included in the C2K packaging.

Installation:

- Use all specified fasteners.
- Fasteners must be spaced evenly, unless otherwise specified, and installed into the bricks or block and not into mortar joints.
- Insert wall ties provided at maximum 300mm centres, bedding the ties into the mortar joints.
- Detailed site work instructions are provided with each wall connector system.
- In exposed locations it may be necessary to incorporate additional protection, for example the insertion of a vertical dpc.

If a magnet sticks to it,
then the steel is NOT austenitic.

"... ferritic stainless steel is unlikely to have sufficient corrosion resistance for use in cavity walls..."
According to the BRE
(Building Research Establishment)

C2KS

C-C-UK-2023 ©2023 SIMPSON STRONG-TIE COMPANY INC.

CH Channel & Tie System

Tie

Channel

The CH is an accepted method of tying masonry to a framed structure using steel channels and ties. The channel can be fixed to the framed structure during or shortly after construction and the ties to be applied later by the bricklayer as the masonry is raised.

Material: Channels are available in epoxy powder coated galvanised steel.

Ties - Stainless steel.

Product Dimensions

References	Length [mm]
CH25/14PG2700	2700

- Structural engineer determines the correct fixing to be used for securing the channel to the structure.
- Hole diameter in channel = Ø5.5mm at 75mm cc.

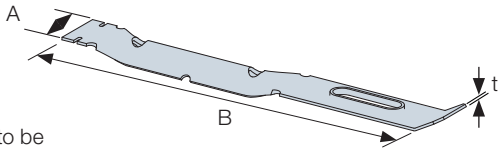

Cavity Tie

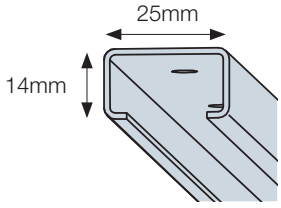

CH25 Channel

Cavity Ties Dimensions

References	Dimensions [mm]		
	A	B	t
CH/T50C	21.5	117.5	1.0
CH/T75C	21.5	142.5	1.0
CH/T100C	21.5	167.5	1.0

Cavity ties are used to tie masonry back to framework across a cavity, yet resist the ingress of moisture.

Bonding Ties Dimensions

References	Dimensions [mm]		
	A	B	t
CH/T150B	21.5	142.5	1.0

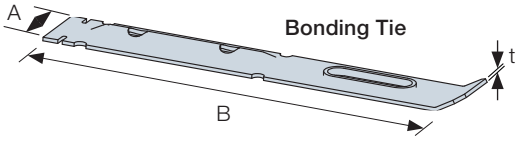

Bonding Tie

Bonding ties are designed to bond masonry firmly back to the frame, resisting both lateral and longitudinal forces. One example of their use would include a short run of masonry fixed to a column adjacent to an opening. In such cases the wall is particularly vulnerable to lateral loads, hence bonding ties are a solution.

CH Debonding Ties Dimensions

References	Dimensions [mm]				
	Tie			Sleeve	
	A	B	t	A_{Sleeve}	B_{Sleeve}
CH/T150DB	21.5	142.5	1.0	25	140

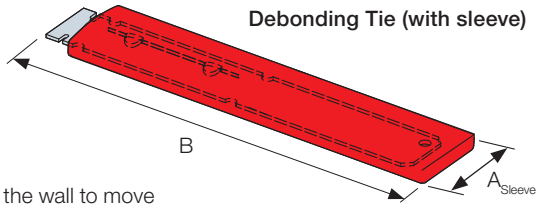

Debonding Tie (with sleeve)

Debonding ties are designed to provide a level of lateral stability whilst allowing the wall to move longitudinally. This is achieved by providing plastic sleeves for the ties within which the tie can slip.

Performance Values

References	Clear Cavity Width [mm]	Characteristic Capacities [N]					
		Tension		Compression		Shear	
		1mm Serviceability	Ultimate	1mm Serviceability	Ultimate	1mm Serviceability	Ultimate
CH/T50C	50	400	1200	700	2100	-	-
CH/T75C	75	400	1200	700	2100	-	-
CH/T100C	100	400	1200	700	2100	-	-
CH/T150B	-	-	-	-	-	240	720
CH/T150DB	-	-	-	-	-	240	720

C-C-UK-2023 ©2023 SIMPSON STRONG-TIE COMPANY INC.

WST Stainless Steel Wall Starter Tie

The WST is a screw-in wall starter tie designed to join new masonry to existing walls without the need for jointing. Each tie is supplied with a nylon wall plug.

- Provides lateral stability for brickwork to blockwork.
- Suitable for use with interior or exterior walls.
- Simply drill a hole, place the wall plug and screw the tie into place.

Material: Wall Tie: Austenitic stainless steel

Wall Plug: Nylon.

Product Dimensions

References	Dimensions [mm]		
	L	T_L	t
SS WST135	135	38	Ø5

Performance Values

References	Characteristic Capacities [N]			
	Tension		Shear	
	1mm Serviceability	Ultimate	1mm Serviceability	Ultimate
WST	1450	1560	940	1860

Note: Performance values stated are based upon tests undertaken with the wall plug installed into mortar of compressive strength class M2 designation (iv), that had cured for 28 days.

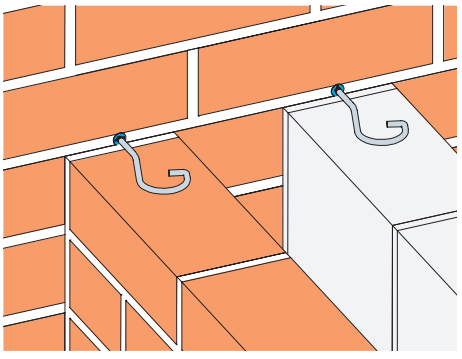

Typical WST Installation.

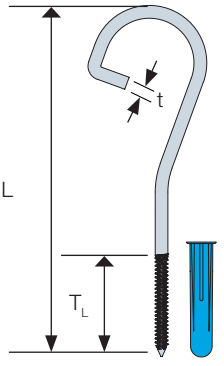

Installation

- Ties should be fixed at 225mm vertical centres and be central to each leaf of the new wall.
- Drill a hole for the wall plug (Ø10 x 45mm) and insert the nylon wall plug.
- Ties may be fixed horizontally into the mortar joint of the existing wall, or at an angle of 30° to the horizontal and then bent into the bed joint of the new brickwork. When fixing the tie into the mortar joint, ensure the mortar is sound (i.e. not soft or crumbly) and is capable of taking the fixings and the loads applied to it.
- Build the tie into the new leaf of the blockwork, ensuring that it is surrounded by mortar.

C-C-UK-2023 ©2023 SIMPSON STRONG-TIE COMPANY INC.

Wall Ties

The selection and spacing of wall ties depends upon the type of masonry to be tied, the cavity width, the type and height of the building, its location, tie embedment, installation density, positioning and design life.

Masonry wall ties are classified in accordance to PD6697 whilst timber frame wall ties are classified in accordance to BS 5268-6.1 (BS 5268-6.1 was officially withdrawn on the implementation of Eurocodes in March 2010, however, until further guidance is made available, timber frame wall ties should still be selected from the type classifications given in Annex B of BS 5268-6.1:1996).

Wall ties type classifications and minimum performance requirements are as stated in the following tables:

Classification of Wall Ties by end use

Tie Type	Application	Building Height	Location
Masonry Wall Ties			
Type 1 (Heavy Duty)	Suitable for most masonry cavity and cladding walls and most building sizes. Not very flexible and not recommended for applications where there is expected to be excessive differential movement between leaves.	Any	Suitable for use on most sites. For relatively tall buildings located in vulnerable locations, and for buildings of unusual shapes, the necessary tie provision should be calculated.
Type 2 (General Purpose)	Suitable for domestic dwellings and small commercial buildings.	Up to 15m	Suitable for buildings on flat sites where the fundamental basic wind speed velocity is up to 31 m/s, except areas where the site is at an altitude of 150m or more above sea level.
Type 3 (Basic)	As Type 2.	Up to 15m	As Type 2 but fundamental basic wind velocity limited to 27 m/s.
Type 4 (Light Duty)	Suitable only for masonry cavity walls, comprising two leaves of similar thickness in the range of 90mm to 150mm. Suitable for internal separating cavity walls in most buildings.	Up to 10m	Suitable for flat sites within towns and cities anywhere in the UK except the north western fringes of Scotland and Ireland (where the fundamental basic wind velocity exceeds 27 m/s) and any areas where the site is at an altitude of 150 m or more above sea level.
Timber Frame Wall Ties			
Type 5	Suitable for tying masonry outer cladding on to softwood structural framework of residential and industrial/commercial buildings up to three storeys.	Up to 15m	Flat sites within towns and cities where the basic wind speed does not exceed 25 m/s and altitude is not more than 150m above sea level.
Type 6	As Type 5, but suitable for developments of up to four storeys.	Up to 15m	Flat sites within towns and cities where the basic wind speed does not exceed 25 m/s and altitude is not more than 150m above sea level.
Type 7	As Type 5, but suitable for developments of between 5 and 7 storeys, being designed to accommodate the increased vertical differential movement.	Up to 18m	Calculated for actual performance value required for each location.

Performance of Wall Ties

The tensile and compressive load capacity of tie types should be equal to, or greater than, the specified load capacity for a specified embedment length, but should not be less than the figures given in the following table.

Minimum declared tensile load capacity and compression load capacity for tie type for design embedment length.

Tie Type	Minimum Mortar Class & Designation	Declared Tensile Load Capacity [N]	Declared Compressive Load Capacity [N]
1	M2 (iv)	2500	2500 (2000)
2	M2 (iv)	1800	1300 (1050)
3	M2 (iv)	1100	800 (650)
4	M2 (iv)	650	450 (350)
5	M4 (iii)	600	425
6	M4 (iii)	630	440
7	M4 (iii)	To be declared by the Wall Tie Manufacturer	

Note: Values in brackets for Declared Compressive Load Capacity are those confirmed for inclusion in the next issue of PD6697 following a change to test procedures in BS EN 846-5. Therefore, ties originally tested to BS EN 846-5:2002 need to achieve the un-bracketed performance values whilst new ties tested to BS EN 846-5:2012 need to achieve the bracketed performance values.

C-C-UK-2023 ©2023 SIMPSON STRONG-TIE COMPANY INC.

Recommended Density & Positioning

Masonry wall ties should be evenly distributed, typically at a density of 2.5 ties/m2 (900mm horizontal x 450mm vertical) except around openings, and should preferably be staggered. At the vertical edges of openings and at vertical unreturned or unbonded edges (for example at movement joints and up the sloping verge of gable walls), additional wall ties should be used at a rate of one tie per 300mm height or equivalent, placed not more than 225mm from the edge.

Insulation Board

Where insulation board is installed within the cavity and restrained by wall ties with insulation clips, it may be necessary to reduce the horizontal spacing of the ties to 600mm, to suit board widths.

Timber frame masonry wall ties should be evenly distributed, typically at a density of 4.4 ties/m2 (600mm horizontal x 375mm vertical). However in more severe locations the tie density should be increased to 7 ties/m2 (600mm horizontal x 225mm vertical).

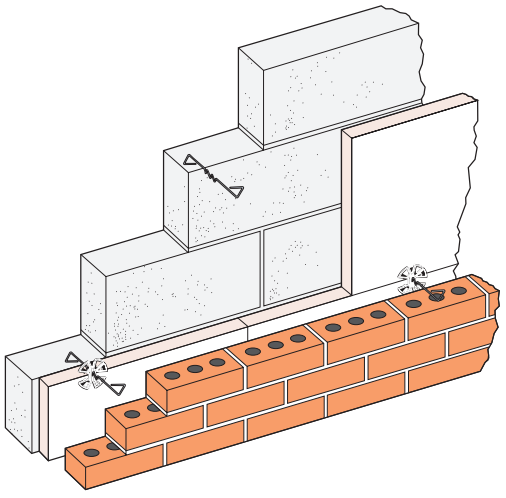

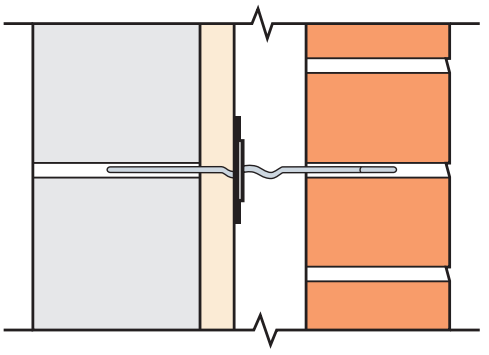

Length of Tie and Embedment

Wall ties should be of the correct length to ensure they are fully embedded in the masonry.

The tie should have a minimum embedment of 50mm in each leaf, but also allow for site tolerances relating to the cavity width of the tie.

The recommended tie lengths will therefore achieve an embedment of between 62.5mm and 75mm.

Installation

To ensure wall ties are effective they should be installed as the inner leaf is constructed and not pushed into a mortar joint. The wall ties should be pressed into fresh mortar, NOT positioned directly onto the masonry with mortar placed around. It is important that the embedded portion of the tie is surrounded by mortar.

Ideally, ties should be installed level, or with a slight fall towards the outer leaf with the installed ties being free of mortar droppings to ensure the drip functions correctly.

The tie should be positioned such that the minimum required embedment is achieved and the drip portion of the tie is central within the open cavity.

The practice of 'bending up' installed wall ties should be discouraged as this can adversely affect the performance of the tie.

Sound Resistance

As stated within the Approved Document E 2003 - Resistance to the Passage of Sound - wall ties used in external and separating cavity walls have to have a minimum value of dynamic stiffness to reduce the transmission of airborne noise. Ties are separated into Type A and Type B.

- Type A: Can be used in separating walls and external walls subject to them also having the required structural capacity. They can be butterfly ties or other ties with a dynamic stiffness of less than 4.8 MN/m3.
- Type B: Can only be used in external cavity walls subject to them also having the required structural capacity. They can be butterfly ties or other ties with a dynamic stiffness of less than 113 MN/m3.

C-C-UK-2023 ©2023 SIMPSON STRONG-TIE COMPANY INC.

WTS Wire Wall Tie

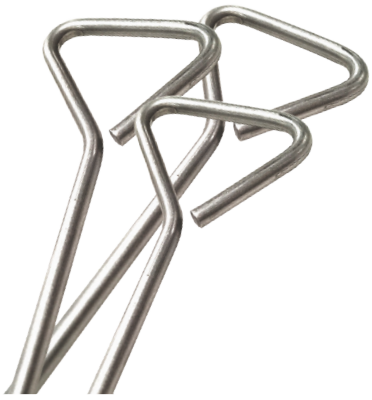

The WTS is a range of wall ties designed for connecting masonry walls to masonry walls.

- Available in Type 2, 3 and 4.
- Suitable for use with cavities ranging from 50mm to 175mm.
- Use in conjunction with IRC001 to hold rigid insulation in place.

Material: Austenitic stainless steel.

Installation: For walls in which both leaves are 90mm or thicker, masonry ties need to be placed at not less than 2.5 per square metre (900mm horizontal x 450mm vertical centres). The ties should be evenly distributed throughout the wall areas, with the exception of around openings and should be staggered where possible.

Product Dimensions

References	Type Classification	Cavity Width [mm]	B [mm]
Central Drip			
WTS2-200	Type 2	50-75	200
WTS2-225		76-100	225
WTS2-250		101-125	250
WTS2-275		126-150	275
WTS3-300	Type 3	151-175	300
WTS4-200	Type 4	50-75	200
WTS4-225		76-100	225
WTS4-250		101-125	250
WTS4-275		126-150	275
Offset Drip			
WTODS2-225IRCP50	Type 2	76-100	225
WTODS2-250IRCP50		101-125	250
WTODS2-275IRCP50		126-150	275
WTODS3-300IRCP50	Type 3	151-175	300

Note: The offset drip variation is for use where insulation materials are in the cavity. Box contains wall ties and insulation disc.

WTS4: Type A Approval

WTS4-200 and WTS4-225 ties meet the requirements of Approved Document E: Resistance to the Passage of Sound and are suitable for use in separating party walls of new build attached dwellings.

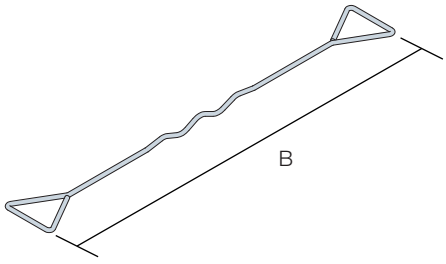

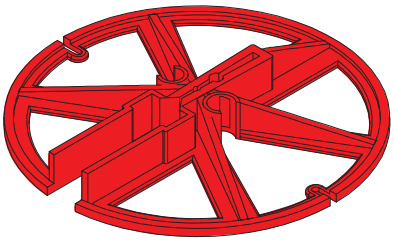

IRC001 Retaining Clip

- Suitable for use with all cavity wall ties.
- Used to hold rigid insulation material back to structure.

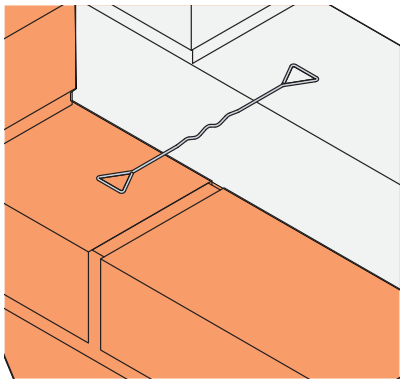

Typical installation
Please note: Tie should be embedded into the mortar. Not shown above for clarity.

C-C-UK-2023 ©2023 SIMPSON STRONG-TIE COMPANY INC.

BTS/SWT Brick to Timber & Brick to SIP Tie

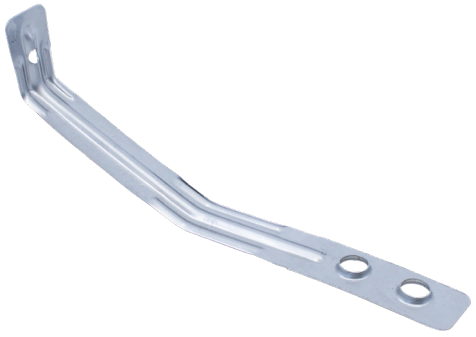

The BTS and SWT wall ties used to restrain external brickwork back to timber frame building structures.

The BTS and SWT offer an outstanding combination of performance and cost in a wall tie for use with timber frame or SIP (Structural Insulated Panels).

Allows up to 24mm of differential movement.

Material: Austenitic stainless steel.

Product Dimensions

References	Application	Type Classification	Cavity Width [mm]	B
BTS50N	Timber Frame Cavity Wall Tie	Type 6	50	124
BTS75N	Timber Frame Cavity Wall Tie	Type 6	75	149
BTS100N	Timber Frame Cavity Wall Tie	Type 6	100	174
SWT50	SIP Cavity Wall Tie	Type 6	50	124
SWT75	SIP Cavity Wall Tie	Type 6	75	149
SWT100	SIP Cavity Wall Tie	Type 6	100	174

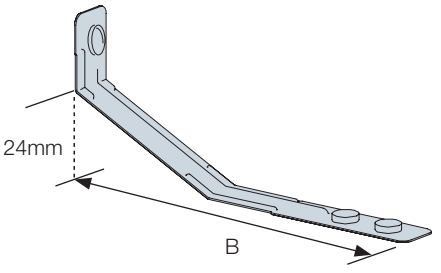

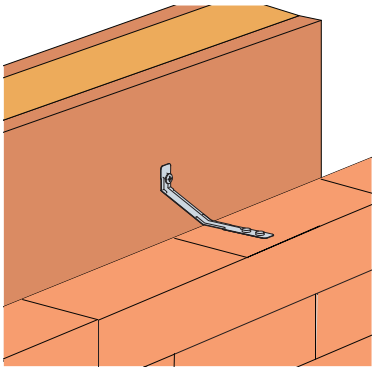

SIP Installation using SWT

Due to having to fix to OSB alone, when building with SIP, a stainless steel screw (supplied with the tie) is required to maintain the strength of the connection.

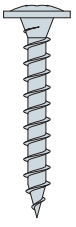

SCSS4.0x30mm Screw Supplied with SWT.

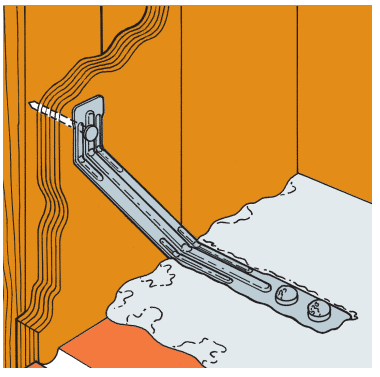

Timber Frame Installation using BTS

Installed with 3.35mm x 50mm stainless steel annular ring shank nails (supplied with tie).

NSS3.35x50mm Nail Supplied with BTS.

C-C-UK-2023 ©2023 SIMPSON STRONG-TIE COMPANY INC.

HMBTS High Movement Timber Frame Tie

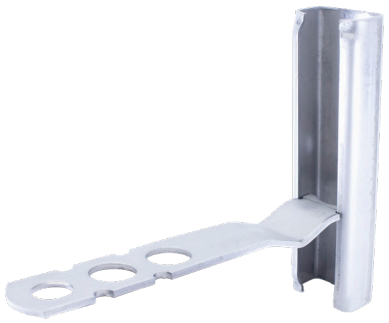

The HBMTS type 7 timber frame wall tie is designed to connect the masonry outer leaf to a structural timber frame.

- Available in a range of sizes to suit cavities from 50mm to 150mm.
- The HMBTS can accommodate up to 65mm of vertical movement.
- Type 7 wall tie used in instances where the amount of required deflection exceeds that of the standard type 6 wall tie.

Material: Austenitic stainless steel.

Product Dimensions

References	Cavity Width [mm]	Product Dimensions [mm]				
		A	B	C	D	E
HMBTS50N	50	24	90	16	115	19
HMBTS75N	75	24	90	16	130	19
HMBTS100N	100	24	90	16	150	19
HMBTS150N	150	24	90	16	200	19

Performance Values

References	Characteristic Capacities [N]	
	Tension	Compression
	Ultimate	Ultimate
HMBTS	1210	970

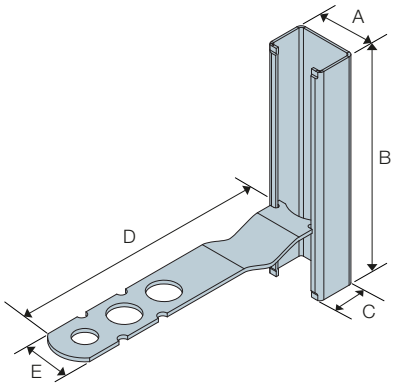

HMBTS Stainless Steel Channel, Strip Tie & M6x50mm Stainless Steel Fixing.

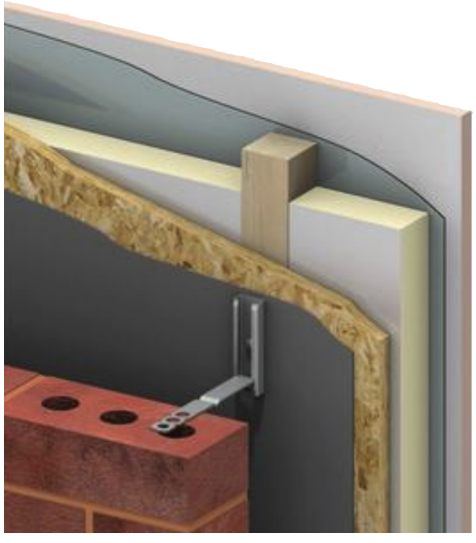

Installation:

- HMBTS is installed with the M6x50mm Stainless Steel Coach Screw (supplied).
- The channel is to be positioned onto the timber frame so that the coach screw is installed through the OSB sheathing and into the timber frame stud.
- Position the HMBTS so that when the tie is installed it sits 10mm to 12mm from the bottom of the channel.
- The density of ties required for the building is to specified by the building designer / structural engineer.

C-C-UK-2023 ©2023 SIMPSON STRONG-TIE COMPANY INC.

WSTC Stainless Steel Cavity Wall Tie

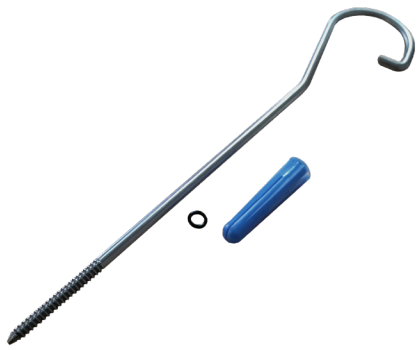

The WSTC is a screw-in cavity wall tie suitable for connecting a new leaf of masonry to an existing structure.

- Supplied with nylon wall plug and neoprene 'O' ring.
- Suits cavities 50 to 125mm.

Material:

- Wall Tie: Austenitic stainless steel.
- Wall Plug: Nylon.
- 'O' Ring: Neoprene.

Product Dimensions

References	Cavity Width [mm]	Dimensions [mm]		
		L	T_L	t
WSTC180	50 - 75	180	38	Ø5
WSTC200	76 - 100	200	38	Ø5
WSTC230	101 - 125	230	38	Ø5

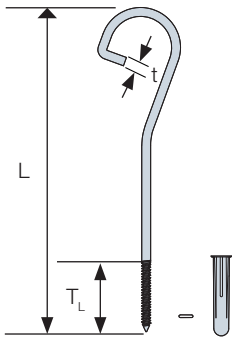

Performance Values

References	Characteristic Capacities [N]				
	Tension		Shear		
	1mm Serviceability	Ultimate	1mm Serviceability	Ultimate	Compressive Strength at 1mm Displacement [N]
WSTC	1150	1560	1860	2250	1011

Installation:

- Tie should be fixed into brickwork, blockwork or stone.
- Tie must be installed horizontally.
- Drill a hole for the wall plug (Ø10 x 45mm) and insert the nylon wall plug.
- Slide the neoprene 'O' ring onto the tie and screw into the plug.
- Build the tie into the new leaf of blockwork ensuring that it is surrounded by mortar.

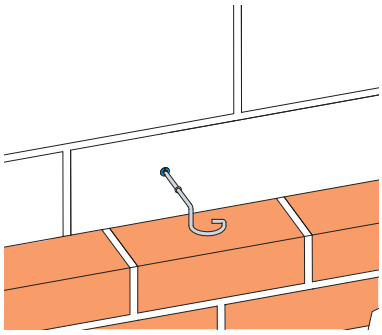

Typical WSTC Installation

FT-DB Frame Debonding Tie

If tying new masonry to an existing structure with individual ties, the designer may choose a frame debonding tie to allow for differential movement.

Material: Galvanised mild steel & plastic sleeve.

Product Dimensions

References	Dimensions [mm]						Holes Flange C	
	A	B	C	t	A_{Sleeve}	B_{Sleeve}	Ø4.1	Ø6
FT150DB	21.5	100	50	1.0	25	135	2	1
FT200DB	21.5	150	50	1.0	25	135	2	1

NOTE: Not suitable for cavity wall construction.

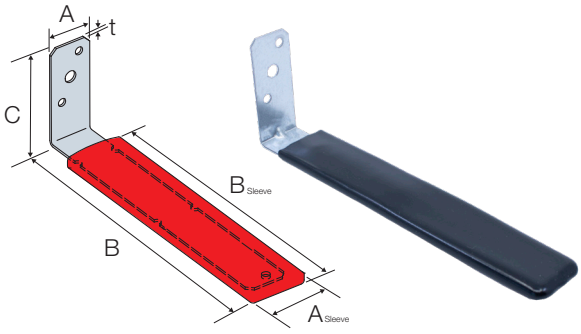

C-C-UK-2023 ©2023 SIMPSON STRONG-TIE COMPANY INC.

GIC-UK-2023 ©2023 SIMPSON STRONG-TIE COMPANY INC.

Guidance for Use - Bead & Mesh

Simpson Strong-Tie® supplies a range of Beads and Mesh to satisfy the requirements of modern building design, along with the needs of traditional repair and maintenance work.

In external applications, only austenitic stainless steel or PVCu products should be used. Galvanised steel beads should not be used externally, according to NHBC and LABC regulations.

Corrosion Protection

- In normal circumstances matured plasterwork may be regarded as dry and therefore non-corrosive.
- The initial plaster drying out period should be kept to a minimum (maximum of 5-7 days) to reduce the risk of possible corrosion of the steel.
- The use of water contaminated with soluble salts in plastering mixes should be avoided, as should soluble chlorides, as they are likely to increase the risk of metal corrosion.
- All additives added to the plaster mix shoud be checked for their chemical components as they may adversely affect the coating of the bead.
- Stainless steel beads are specifically designed for cement based renders and should not be used with gypsum based plasters.
- To prevent bimetallic corrosion, ensure all metal fixings used in the installation are of the same material, or are separated with a suitable plastic sheathing.
- In general, metal beads should be kept dry and stored flat. Care should also be taken to prevent damage to the galvanised coating.
- Refer to the plaster/render manufacturer for further information.

Material: Simpson Strong-Tie® plastering accessories are manufactured from either: pre-galvanised mild steel, austenitic stainless steel or PVCu.

MILD STEEL GALVANISED TO Z275 IS NOT SUITABLE FOR EXTERNAL APPLICATIONS SEE NHBC & LABC REGULATIONS FOR GUIDANCE. AUSTENITIC STAINLESS STEEL or PVCu SHOULD BE USED IN EXTERNAL APPLICATIONS WITH THE APPROPRIATE CEMENT BASED RENDERS.

General Installation Notes:

- The most appropriate bead should be specified in accordance with the application, required plaster render depth and desired finish. In external applications, only austenitic stainless steel or PVCu products should be used.
- When using beads internally, ensure that the drying out time of the plaster is kept to a minimum, particularly during winter months. Provide heating and ventilation to the area when necessary.
- Ensure that all metal components used in a given installation are of the same material type.
- Always wear gloves when cutting or handling to prevent injury from sharp edges.
- Beads and Mesh may be cut to size as required by using snips across the mesh and a hacksaw across the bead's noses.
- Beads should be fixed in accordance with one of the following methods:

1. Pressing the bead's wings firmly into plaster dabs placed at approximately 600mm centres both sides of the arris.
2. The wings may be embedded into the first coat of plaster for normal two coat work.
3. Nailing to a background with galvanised, or stainless steel nails.

- When beads are used in conjunction with metal lath backgrounds, galvanised or stainless steel tying wire may be used. Ensure the wire material matches the bead and lath materials. All wire should be twisted tightly and the ends bent away from the finished face of the coating. (For lath fixing details refer to DML and RBL sections of catalogue).
- Avoid damage to beads when trowelling plaster or render.
- Allow plaster/render to dry completely before applying paint.

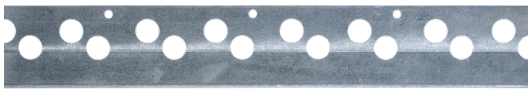

Internal Perforated Stop Bead

Internal Thin Coat Bead

Angle Bead

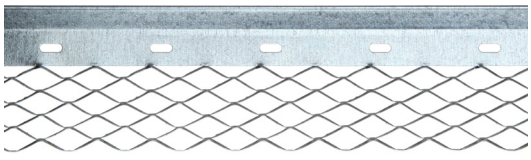

Internal Mesh Wing Stop Bead

Internal Mini Mesh Bead

It is the responsibility of the user to make sure that the correct product is used. If further advice is needed, contact our technical department on 01827 255600 or via email at uktechnical@strongtie.com.

C-C-UK-2023 ©2023 SIMPSON STRONG-TIE COMPANY INC.

PSB Plaster Stop Bead

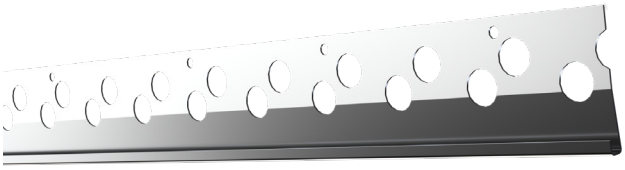

PSB0 Internal Thin Coat Plaster Stop Bead
(Perforated Wing)

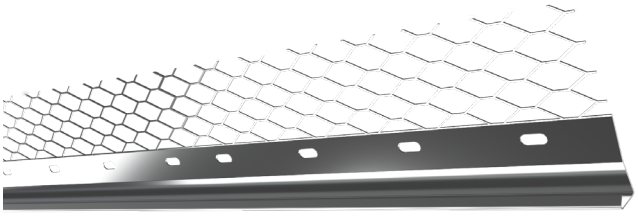

PSB1 Plaster Stop Bead
(Mesh Wing)

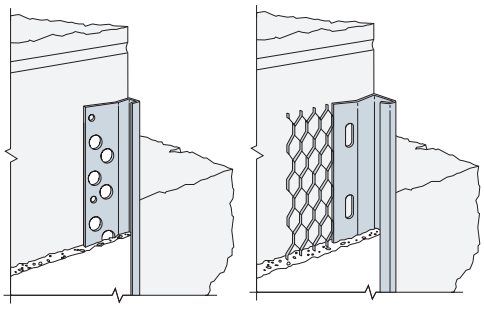

PSB0 Installed PSB1 Installed

C-C-UK-2023 ©2023 SIMPSON STRONG-TIE COMPANY INC.

PSB Internal Thin Coat Plaster Stop Bead (30mm Perforated Wing)

PSB Plaster/Render Stop Bead (65mm Mesh Wing)
Galvanised - Internal Use
Austenitic Stainless Steel or PVCu - External Use

- Provides a neat, finished, thin coat plaster edge wherever required.
- Numerous applications internally including those at openings, abutment of walls and for ceiling finishes.

Product Dimensions

References		Dimensions
Galvanised	Stainless Steel	
Internal Thin Coat Perforated Stop Bead		
PSB0324	-	3mm x 2.4m
PSB0330	-	3mm x 3.0m
PSB0624	-	6mm x 2.4m
PSB0630	-	6mm x 3.0m
Plaster/Render Stop Bead		
PSB1024	-	10mm x 2.4m
PSB1030	PSB1030S	10mm x 3.0m
PSB1324	-	13mm x 2.4m
PSB1330	PSB1330S	13mm x 3.0m
PSB1624	-	16mm x 2.4m
PSB1630	PSB1630S	16mm x 3.0m
PSB1930	PSB1930S	19mm x 3.0m

In external applications, only austenitic stainless steel or PVCu products should be used. Galvanised steel beads should not be used externally, according to NHBC and LABC regulations.

ERS External Render Stop Bead

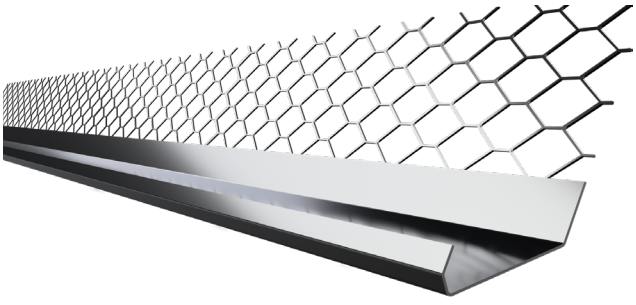

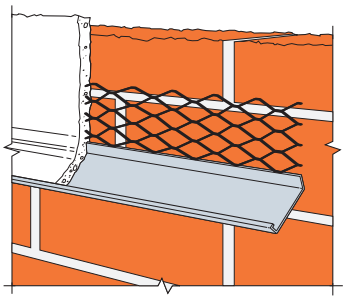

External Render Stop Bead
(16mm-19mm Render Depth, 45mm Wing)

Austenitic Stainless Steel

- Designed to provide an aesthetic, enhanced, weathering detail.
- Provides reinforcement to resist impact damage.
- Use austenitic stainless steel or PVCu for all external situations.

References	Dimensions
ERS30S	3.0m

PEB Plasterboard Edge Bead

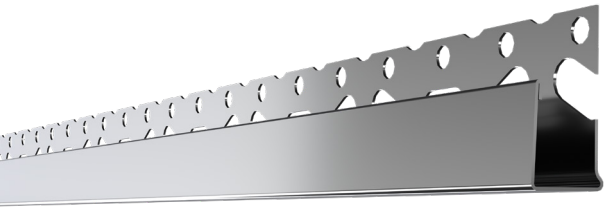

PEB Internal Plasterboard Edge Bead

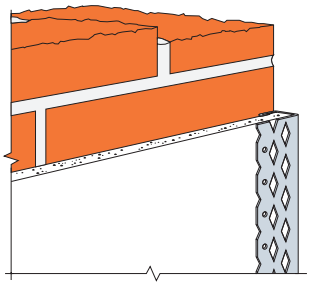

PEB Installed

PEB Internal Plasterboard Edge Bead (25mm Wing)

- Provides reinforcement for plasterboard edges.
- Suitable for 9.5mm or 12.5mm plasterboard.
- Pre-galvanised mild steel.

Product Dimensions

References	Dimensions
PEB1030	9.5mm x 3.0m
PEB1330	12.5mm x 3.0m
PEB1530	14.5mm x 3.0m

MVB Movement Bead

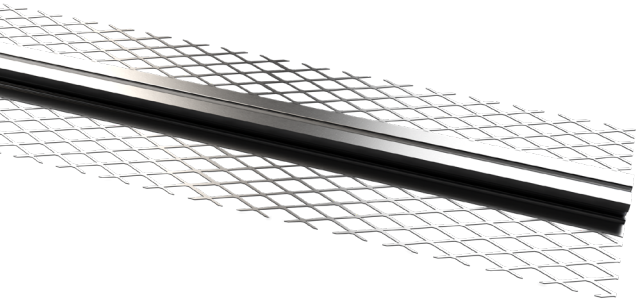

MVB Movement Bead

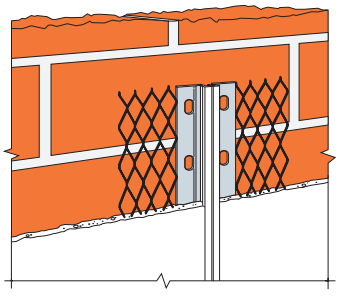

MVB Installed

MVB Movement Bead
(140mm overall width, 65mm wing)
Galvanised - Internal Use
Austenitic Stainless Steel or PVCu - External Use

- Movement Bead consists of two lengths of Stop Bead linked with a white PVC extrusion.
- Allows +/-3mm differential expansion or settlement movement between adjoining surfaces.

Product Dimensions

References		Dimensions
Galvanised	Stainless Steel	
MVB1030	-	10mm x 3.0m
MVB1330	-	13mm x 3.0m
MVB1630	MVB1630S	16mm x 3.0m
MVB1930	-	19mm x 3.0m

In external applications, only austenitic stainless steel or PVCu products should be used. Galvanised steel beads should not be used externally, according to NHBC and LABC regulations.

C-C-UK-2023 ©2023 SIMPSON STRONG-TIE COMPANY INC.

SAB Angle Bead

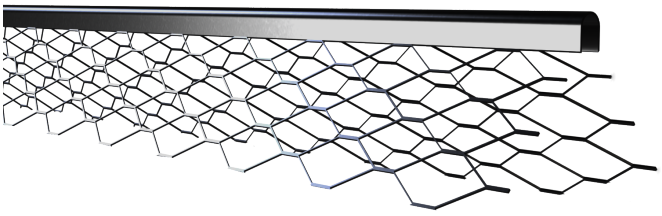

SAB Standard Angle Bead

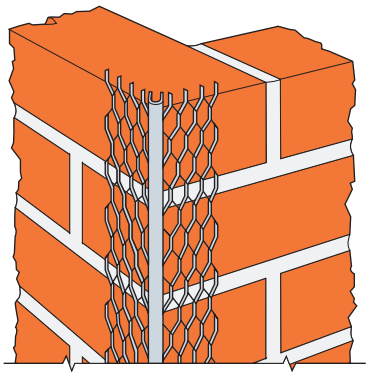

SAB Installed

SAB Angle Bead
(45mm wing, 53mm wing & 13mm plaster depth)
Galvanised - Internal Use
Austenitic Stainless Steel or PVCu - External Use

- Helps for a true, straight arris
- Designed to prevent chipping and cracking to vulnerable corners.
- Use with two coat plaster/render application.

Product Dimensions

References		Dimensions [m]
Galvanised	Stainless Steel	
SAB24	-	2.4
SAB24W	SAB24SW	2.4
SAB30	SAB30S	3.0
SAB30W	SAB30SW	3.0

In external applications, only austenitic stainless steel or PVCu products should be used. Galvanised steel beads should not be used externally, according to NHBC and LABC regulations.

C-C-UK-2023 ©2023 SIMPSON STRONG-TIE COMPANY INC.

TCB Internal Thin Coat Angle Bead

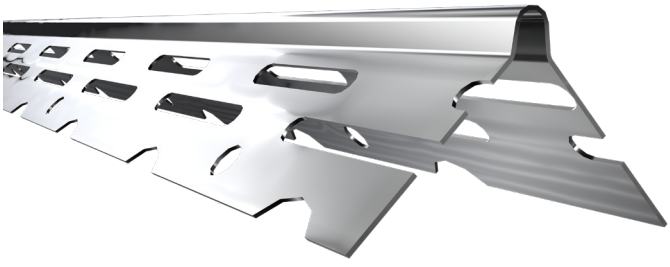

TCB Internal Thin Coat Angle Bead

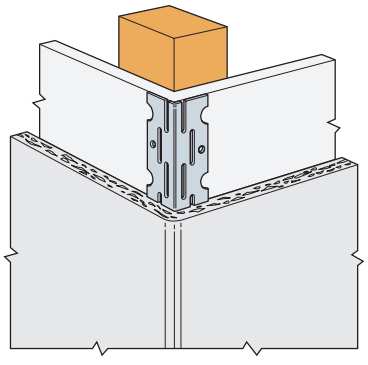

TCB Installed

TCB Internal Thin Coat Bead
(25mm wing, 3mm plaster depth)

- Designed for use with one coat plaster work down to a 3mm finish.
- Perforated wings to provide an excellent plastering key.

Product Dimensions

References	Dimensions
TCB2404	2.4m
TCB3004	3.0m

MMB Mini Mesh Bead

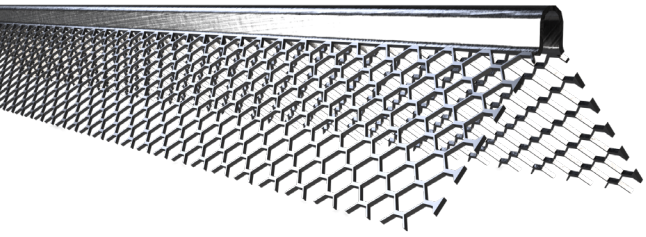

MMB Mini Mesh Bead

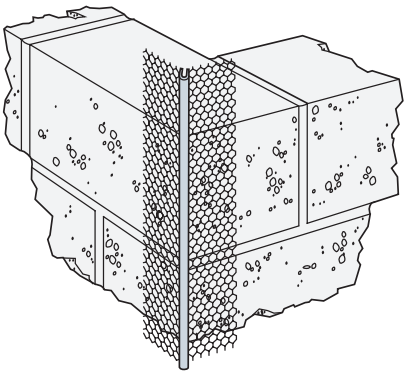

MMB Installed

MMB Internal Mini Mesh Bead (25mm wing, 3mm plaster depth)

- Designed for use with one coat plaster work down to a 3mm finish.
- Fine mesh wings to provide an excellent plastering key.

Product Dimensions

References	Dimensions
MMB24	2.4m
MMB30	3.0m

C-C-UK-2023 ©2023 SIMPSON STRONG-TIE COMPANY INC.

PVCu Bead

More plastering professionals are turning to PVCu bead

- Superior corrosion resistance.
- Convenient, easy to cut lengths on site.
- Light and easy to transport.
- Resistant to damage.
- UV resistant.

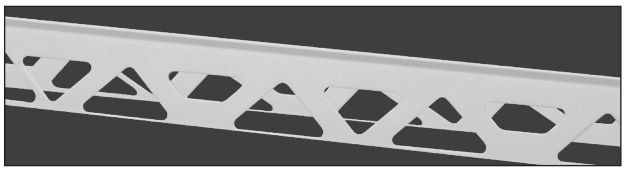

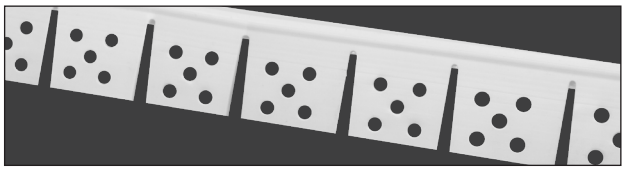

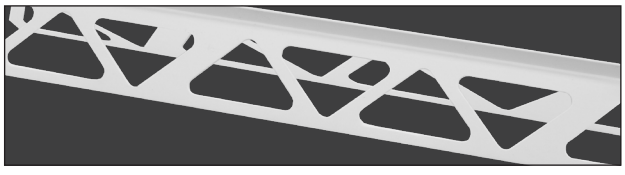

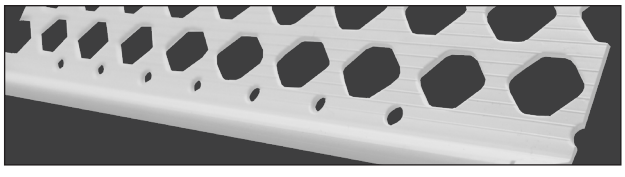

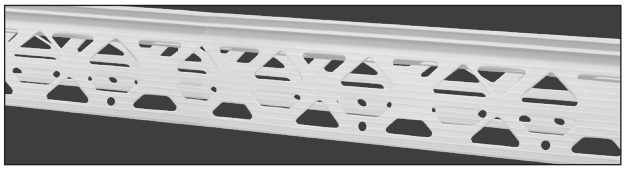

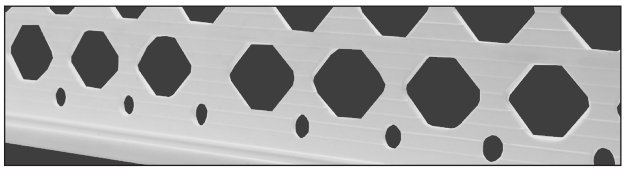

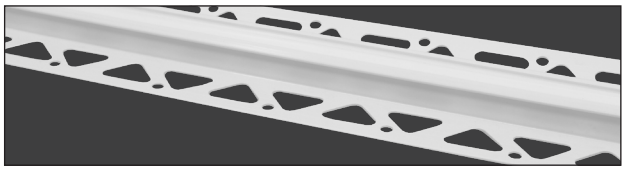

Simpson Strong-Tie® PVCu plasterers beads are manufactured from high impact and ultra violet resistant PVCu for extruded profiles and in fire conditions to BS476 part 12: 1991.

They can be used internally or externally with plaster or render.

PVCu beads are available in lengths that differ to steel manufactured alternatives, please contact the Sales Office for more information.

Simpson Strong-Tie PVCu Codes explained

Our bead and mesh codes follow a specific system to help identify the correct type, for example PSAB1030W describes the following:

Material Type
PSAB1030W: P=Plastic

Abbreviated Description
P**SAB**1030W SAB=Standard Angle Bead

Size and Length
PSAB**1030**W 1030=10mm x 3.0m

Colour
PSAB1030**W** W=White

C-C-UK-2023 ©2023 SIMPSON STRONG-TIE COMPANY INC.

PAB PVCu Thin Coat Angle Bead

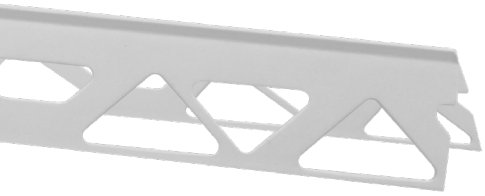

Corrosion resistant, convenient and easy to cut to custom lengths on-site.

Material: PVCu

Product Dimensions

References	Dimensions and Colour
PAB0225W	Angle Bead 2mm x 2.5m - White

PAAB PVCu Arch Angle Bead

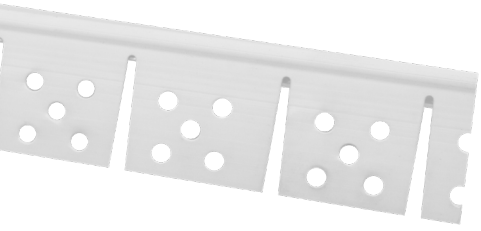

Corrosion resistant, convenient and easy to cut to custom lengths on-site.

Material: PVCu

Product Dimensions

References	Dimensions and Colour
PAAB0225W	Arch Angle Bead 2mm x 2.5m - White
PAAB0230W	Arch Angle Bead 2mm x 3.0m - White

PMM PVCu Mini Mesh Angle Bead

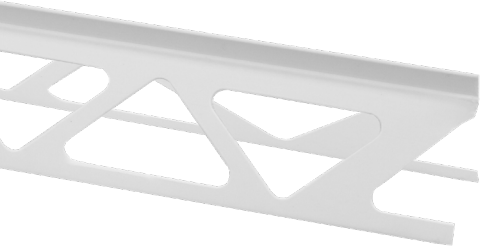

Corrosion resistant, convenient and easy to cut to custom lengths on-site.

Material: PVCu

Product Dimensions

References	Dimensions and Colour
PMM0225W	Mini Mesh Angle Bead 2mm x 2.5m - White

PBC PVCu Render Stop Bead

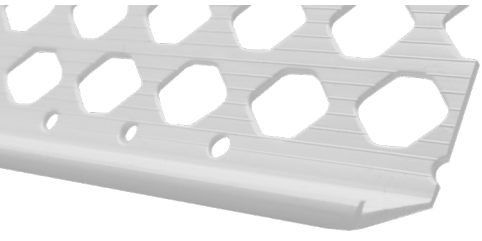

Corrosion resistant, convenient and easy to cut to custom lengths on-site. PBC provides an enhanced weathering detail.

Material: PVCu

Product Dimensions

References	Dimensions and Colour
PBC1030I	Render Stop Bead 10mm x 3.0m - Ivory
PBC1030W	Render Stop Bead 10mm x 3.0m - White
PBC1530W	Render Stop Bead 15mm x 3.0m - White
PBC1530I	Render Stop Bead 15mm x 3.0m - Ivory
PBC2030W	Render Stop Bead 20mm x 3.0m - White
PBC2030I	Render Stop Bead 20mm x 3.0m - Ivory

C-C-UK-2023 ©2023 SIMPSON STRONG-TIE COMPANY INC.

PSAB PVCu Standard Angle Bead

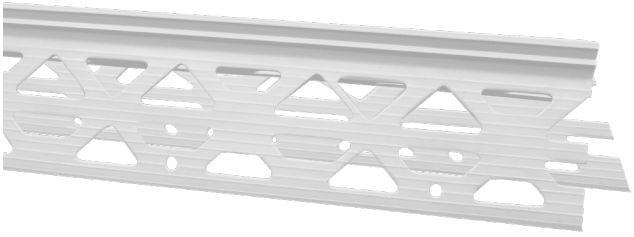

Corrosion resistant, convenient and easy to cut to custom lengths on-site. PSAB helps to ensure a true, straight arris.

Material: PVCu

Product Dimensions

References	Dimensions and Colour
PSAB0430W	Angle Bead 4mm x 3.0m - White
PSAB0630W	Angle Bead 6mm x 3.0m - White
PSAB0825W	Angle Bead 8mm x 2.5m - White
PSAB1025W	Angle Bead 10mm x 2.5m - White
PSAB1025G	Angle Bead 10mm x 2.5m - Grey
PSAB1025I	Angle Bead 10mm x 2.5m - Ivory
PSAB1030W	Angle Bead 10mm x 3.0m - White
PSAB1030I	Angle Bead 10mm x 3.0m - Ivory
PSAB1525W	Angle Bead 15mm x 2.5m - White
PSAB1530W	Angle Bead 15mm x 3.0m - White
PSAB1530I	Angle Bead 15mm x 3.0m - Ivory
PSAB2030W	Angle Bead 20mm x 3.0m - White

C 2023 SIMPSON STRONG-TIE COMPANY INC.

PPSB PVCu Plaster Stop Bead

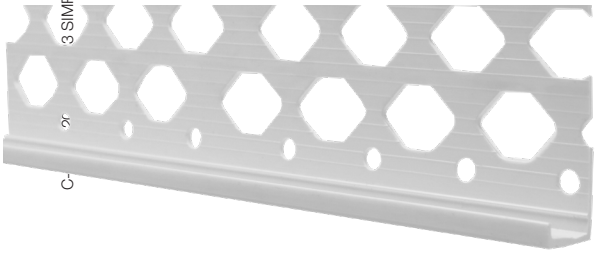

Corrosion resistant, convenient and easy to cut to custom lengths on-site. PPSB provides a neat finish to plaster edges at openings, ceilings and abutment of walls.

Material: PVCu

Product Dimensions

References	Dimensions and Colour
PPSB0430W	Stop Bead 4mm x 3.0m - White
PPSB1030W	Stop Bead 10mm x 3.0m - White
PPSB1025W	Stop Bead 10mm x 2.5m - White
PPSB1030I	Stop Bead 10mm x 3.0m - Ivory
PPSB1525W	Stop Bead 15mm x 2.5m - White
PPSB1530W	Stop Bead 15mm x 3.0m - White
PPSB1530I	Stop Bead 15mm x 3.0m - Ivory
PPSB2030W	Stop Bead 20mm x 3.0m - White

PMB PVCu Movement Bead

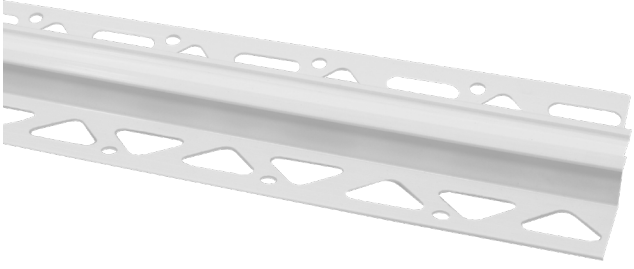

Corrosion resistant, convenient and easy to cut to custom lengths on-site. PMB movement bead with 10mm and 15mm expansion joint options.

Material: PVCu

Product Dimensions

References	Dimensions and Colour
PMB1025W	Movement Bead 10mm x 2.5m - White
PMB1525W	Movement Bead 15mm x 2.5m - White

DML Expanded Metal Lathing

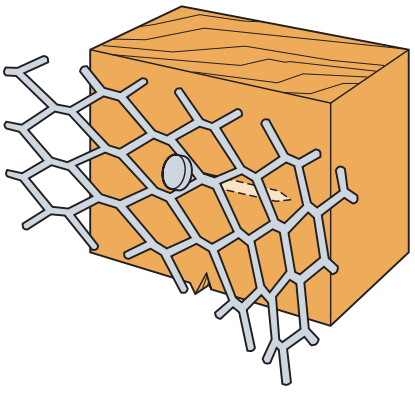

Fixing installed at an angle to give necessary tension.

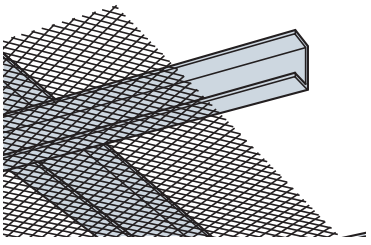

DML Expanded Metal Lathing

Ideal for use as a general reinforcement mesh. DML expanded metal lathing is widely used as a backing to help prevent cracks occurring where different materials meet. Available in galvanised for internal use and stainless steel for external use.

Installation:
All metal components used in any particular application must be of the same material type.

Timber: Using 38 x 7mm diameter head plasterer's nails or 32 x 2mm staples, fix to each support starting from the centre of sheet. Angle fixings away from the centre to give the lath the necessary tension.

Steel: Bend 1.2mm tying wire into long "U" shapes and tie lath at 100mm centres by pulling tight and twisting. When cutting wire ends, ensure that they are not left near the surface of the plaster.

Sheet ends should be overlapped by 50mm on supports and wired together at 150mm centres.

Sheet sides should be overlapped by a minimum of 25mm and wired together at 150mm centres in timber and steel applications.

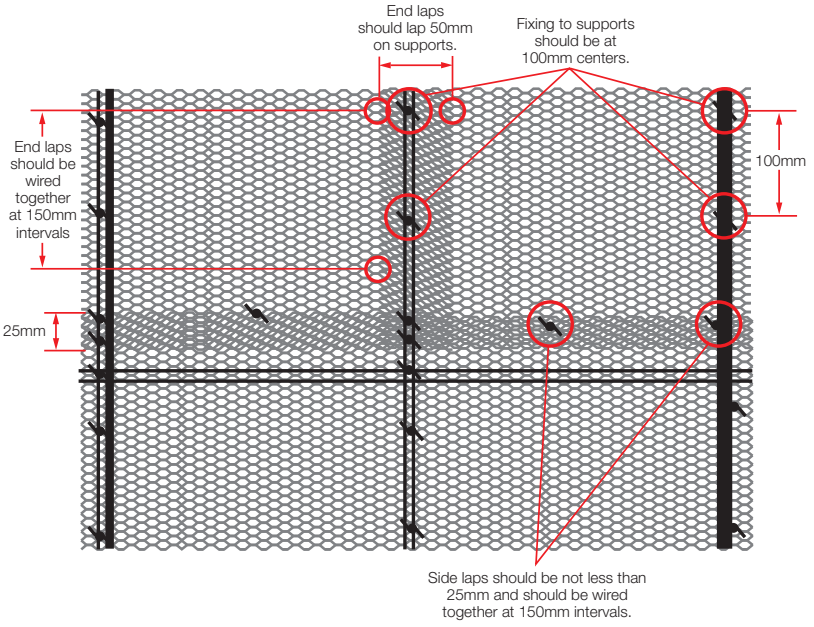

General Fixing Information for Fixing to Metal /Timber Supports

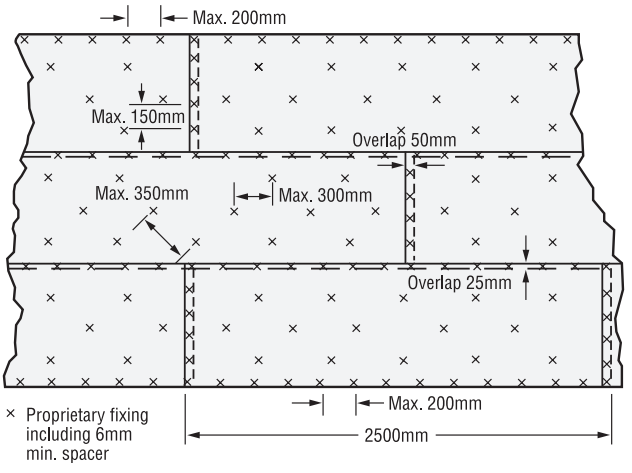

Fixing Expanded Metal Lathing to Solid Backgrounds
Note: Lath can also be installed with the long leg vertical.

Product Dimensions

References		Dimensions [mm]
Galvanised	Stainless Steel	
DML26/10	DML26S/5	2400 x 695 x 0.4

In external applications, only austenitic stainless steel or PVCu products should be used. Galvanised steel beads should not be used externally, according to NHBC and LABC regulations.

C-C-UK-2023 ©2023 SIMPSON STRONG-TIE COMPANY INC.

RBL Rib Lath

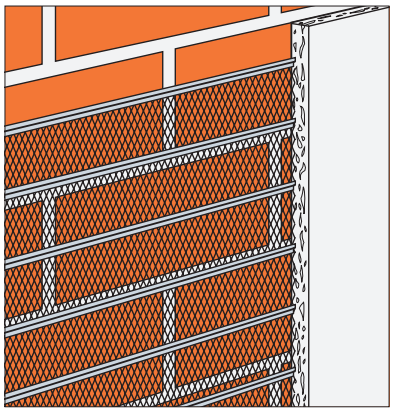

In external applications, only austenitic stainless steel or PVCu products should be used. Galvanised steel beads should not be used externally, according to NHBC and LABC regulations.

The RBL rib lath provides plaster/render backing and is also suitable for the refurbishing of damaged or deteriorated faces of masonry walls. Available in galvanised for internal use and stainless steel for external use.

Installation:
Fixing of lath should follow BS EN 13914-1 Internal Plastering and BS EN 13914-2 External Rendering. The apex of rib lath should always be in contact with the fixing background.

Fixing to metal or timber supports:

All metal components used in any particular application must be of the same material type.

Timber: Use 38 x 7mm diameter plasterer's nails or 32 x 2mm staples to fix with ribs running at 90° to timber studs which should be at a maximum 600mm centres.

Metal: Use 1.63mm or two strands of 1.22mm galvanised mild steel wire or stainless steel to tie around the rib where it crosses each steel stud. Steel studs should be at maximum 600mm centres.

To join sheets of Rib Lath, the edge ribs should be overlapped and the edges tied at 150mm centres with 1.22mm tying wire. Where the ends of the lathing finish in front of a support, overlap by 50mm, otherwise sheets should be overlapped by 100mm with two 1.63mm ties used with each overlapping rib.

Fixing to solid backgrounds: The ribs of the lath should be held firmly against the background by the use of fixings placed at 600mm centres. End edges should be overlapped by 50mm, side edges by 25mm and tied or screwed at 150mm centres.

Product Dimensions

References		Dimensions [mm]
Galvanised	Stainless Steel	
RBL4/10	RBL4S/5	2460 x 600 x 0.40

C-C-UK-2023 ©2023 SIMPSON STRONG-TIE COMPANY INC.

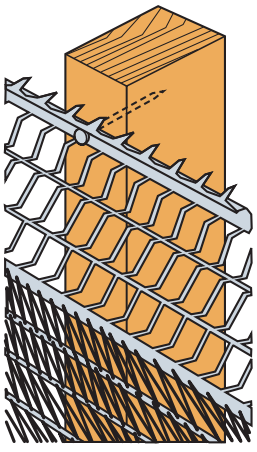

Fixing RBL to Timber Supports using 38mm Nail

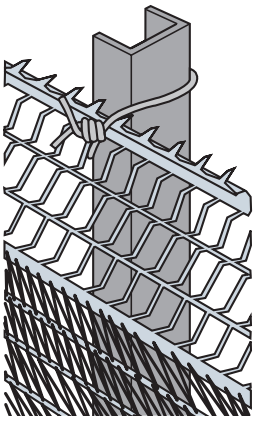

Fixing RBL to Metal Supports using Wire Tie

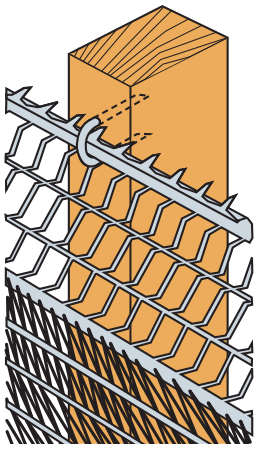

Fixing RBL to Timber Supports using 38mm Staple

CBR Masonry Reinforcement Mesh

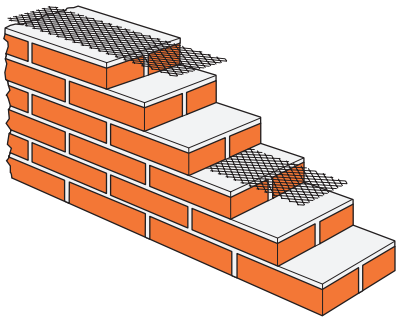

Primarily used to resist local cracking under and over wall openings, CBR provides added strength and stability.

- Supplied on a 20 metre roll.
- Available in galvanised or austenitic stainless steel.
- Assists resistance to tensile stresses where settlement occurs. Easily incorporated into mortar course, coiled for ease of handing.

Material: Austenitic stainless steel or pre-galvanised steel

Installation: All metal components used in any particular application must be of the same material type. Gloves should be worn to protect hands from sharp metal edges. Position the mesh within the masonry bed joints, providing a minimum of 25mm cover to external faces.

Overlap by a minimum of 75mm if joining two lengths together. The mesh can be laid every third brickwork course for most reinforcement.

Product Dimensions

References		Dimensions
Galvanised	Stainless Steel	
CBR2063	CBR2063S	63mm x 20m
CBR20112	CBR20112S	112mm x 20m
CBR20175	CBR20175S	175mm x 20m
CBR20228	CBR20228S	228mm x 20m
CBR20305	-	305mm x 20m

SML/H Security Mesh

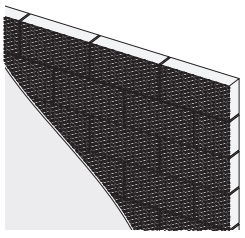

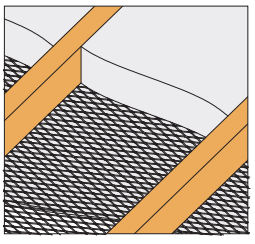

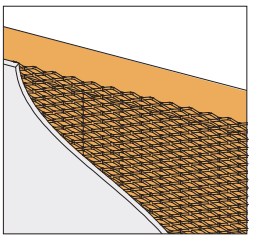

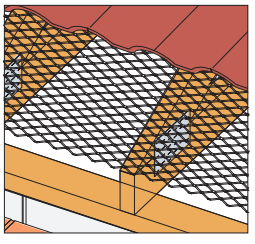

The SML (Security Mesh Light) and SMH (Security Mesh Heavy) are low profile flattened meshes ideal for sandwiching between plasterboard and structural studs or joints to improve resistance to intrusion.

- Diamond shape restricts the use of hand tools for cutting.
- Strands are rolled flat for uniform thickness.
- Continuous mesh manufactured from a single sheet eliminates broken or weak joints.

Installation: Fix at maximum 450mm centres to supporting structures as follows:

Timber Studs: 38mm galvanised staples, nails or screws with a 25mm diameter washer.

Metal Studs: 30mm self-tapping screws with 25mm diameter washer.
Brickwork: 50mm screw and plug with 25mm diameter washer.

Product Dimensions

References	Dimensions [mm]					Weight per Sheet [kg]
	Sheet Size	Mtl Thickness	LW Aperture	SW Aperture	SD Depth	
SML	1250 x 2440	1.14	43.4	18.0	2.3	5.78
SMH	2440 x 1220	2.69	42.9	14.2	4.6	25.5

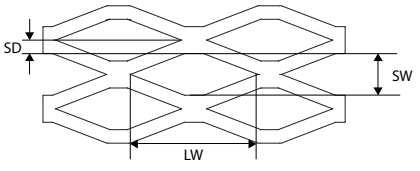

Pictured top to bottom: Block wall, ceiling, stud wall and roof installation examples.

C-C-UK-2023 ©2023 SIMPSON STRONG-TIE COMPANY INC.

STUC Paper Backed Wired Mesh

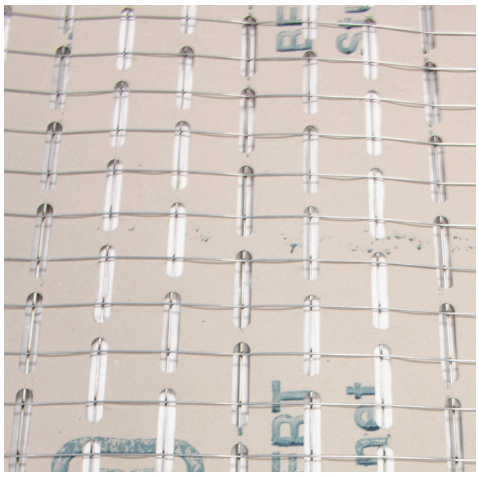

STUCANET is a purpose designed plaster and render carrier manufactured from either galvanised mild steel or stainless steel wire mesh interwoven into a moisture absorbent of chip paper.

The chip paper assists with the wet adhesion and curing of the mortar and the perforations allow the mortar to perfectly bond around the steel wires, resulting in firm anchoring of the mortar and high resistance to load and impact.

It can be used for exterior façade applications and includes a breather membrane to prevent moisture penetration whilst still allowing the wall to breathe.

STUCANET panels are available to suit either timber frame or masonry buildings.

- STUCANET 80 for timber frame applications
- STUCANET S for masonry applications

Each range is available in either stainless steel or pre-galvanised mild steel.

CORRECT OVERLAPPING & FIXING OF STUC80 PANELS

On the long edge and the short edge, it is important to achieve a 'steel on steel' mesh overlap in both directions to ensure continuity of reinforcement for the render. The breather membrane fixed to the rear of the panel is extended at the top (long side) and at the left hand edge (short side). On the right hand edge (short side), the breather membrane is stopped short by 95mm behind the brown paper. This ensures the correct overlap for the membrane is maintained by simply installing panels on top of previously fixed panels, when following the overlap instructions detailed below.

On the vertical (short side) edge, the brown card paper must be removed for two full meshes to enable a 'steel on steel' mesh overlap with the adjacent panel. Remove the brown card paper only on one short side of the panel being installed. This is normally the right hand side panel edge when fixing from right to left. On the horizontal (long side) edge this is not required, as the mesh edges are not covered totally by brown card paper, enabling the mesh overlap to interlock securely, and the render to flow around and so anchor all wires across the overlap.

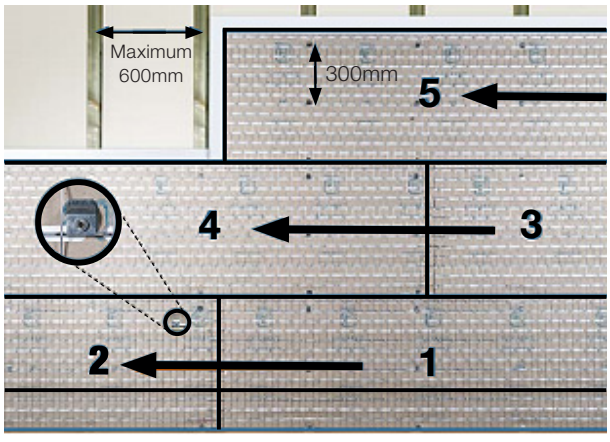

- Only use the panel stiffening wires / fixing wires, to fix the panels to the frame stud, at 600mm cc horizontally and 300mm cc vertically.
- The front side, for application of render is the printed side.
- Always apply panels horizontally on vertical supports and vertically on horizontal supports.
- Always continue installation in the same direction (as seen 1 to 5), this ensures uniformity and continuity of the panel overlaps.
- Vertical (short side panel edge) overlaps must not be in line and should be staggered in a 'brickwork' type of arrangement.
- Fixing packs sold separately.

C-C-UK-2023 ©2023 SIMPSON STRONG-TIE COMPANY INC.

STUC Paper Backed Wired Mesh

SIMPSON Strong-Tie®

Product Dimensions

References	Application	Panel Dimensions & Weight						Pack Qty
		Longitudinal [mm]	Transversal [mm	Surface [m²/panel]	Usable Surface (after overlapping panel) [m²/panel]	Weight per Sheet [kg/panel]	Weight per Sheet [kg/m³l]	
STUCSHGBM	Masonry	2395	705	1.68	1.56	2.00	1.18	15
STUCSEBM		2395	705	1.68	1.56	2.03	1.20	15
STUC80HGBM	Timber Frame	2395	705	1.68	1.56	2.63	1.56	15
STUC80EBM		2395	705	1.68	1.56	2.66	1.58	15

Technical Specifications

References	Material	Breather Membrane Dimensions [mm]		Wire Diameters [mm]			Wire Tensile Strength [N/mm2]
		Longitudinal	Transversal	Fixing Wire	Longitudinal Wire	Cross Wire	
STUCSHGBM	Galv > 215 g/m2	2350	725	Ø1.5 & Ø2.0 (1)	Ø1.5	Ø1.5	> 350
STUCSEBM	Stainless Steel	2350	725	Ø1.5 & Ø2.0 (1)	Ø1.5	Ø1.5	> 350
STUC80HGBM	Galv > 215 g/m2	2350	725	6.00 x 2.00 (2)	Ø1.5	Ø1.5	> 350
STUC80EBM	Stainless Steel	2350	725	6.00 x 2.00 (2)	Ø1.5	Ø1.5	> 350

1. Two parallel round wires.
2. Flat strip.

Fixing Specifications

References	Material	Description	Qty Fixings per Sheet	Box Qty
STU80TFHG	Galvanised	For use with SSTUC80HGBM	12	200
STU80TFE	Stainless Steel	For use with STUC80EBM	12	200
STUS6/60	Stainless Steel	For use with STUCSHGBM & STUCEBM	15	100

Base Coat Application

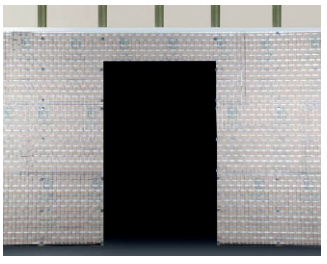

Doorway Installation

Corner Installation

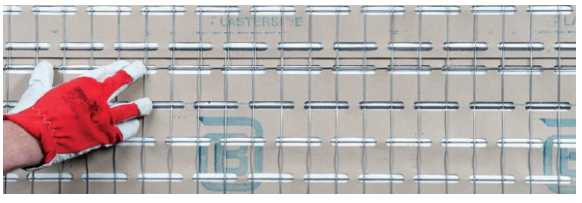

STUC Installation

C-C-UK-2023 ©2023 SIMPSON STRONG-TIE COMPANY INC.

HI Scrolled Hip Iron

The HI is used to hold ridge tiles in place.

Material: Galvanised mild steel.

Product Dimensions

References	Dimensions [mm]				Holes Flange A
	A	B	C	t	Ø6.3
HI4	275	150	27	4	2
BHIP	205	133	27	2	2

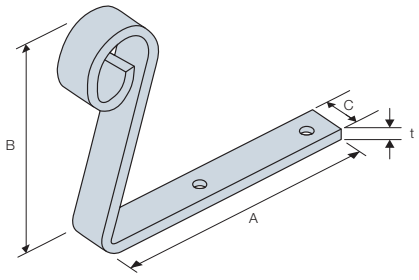

SVM Stainless Steel Soffit Vent Mesh

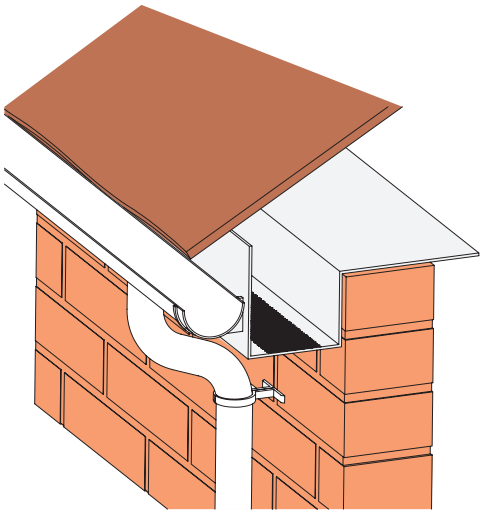

A 75mm wide, fine stainless steel mesh on a 30m roll. Easy to cut and install. Allows roof space ventilation, helps prevent birds and insects from gaining access via soffits.

Material: Stainless steel.

Product Dimensions

References	Dimensions
SVM3075	75mm x 30m

C-C-UK-2023 ©2023 SIMPSON STRONG-TIE COMPANY INC.

WBT Window Board Tie

The WBT attaches window boards to masonry walls.

Material: Pre-galvanised mild steel.

Product Dimension

References	Dimensions [mm]				Holes		
					Flange A		Flange B
	A	B	C	t	Ø4	Ø6	Ø4
WBT06	145	22	12	2.5	2	2	1

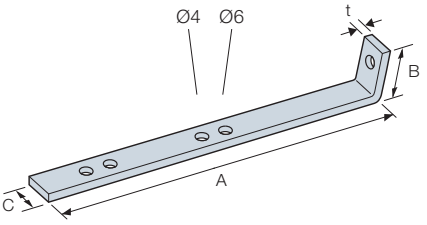

1ARBGAL Arris Rail Bracket

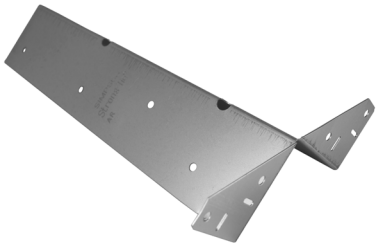

The 1ARBGAL is a 215mm long arris rail bracket for connecting timber arris rails to wooden posts. Suitable for use on 75mm arris rails.

Material: Pre-galvanised mild steel.

Product Dimensions

References	Dimensions [mm]					Holes			
						Flange A	Flange B	Flanged D	
	A	B	C	D	t	Ø5	Ø5	Ø5	Ø2.5x10 Slot
1ARBGAL	62	62	215	115	0.6	3	3	4	4

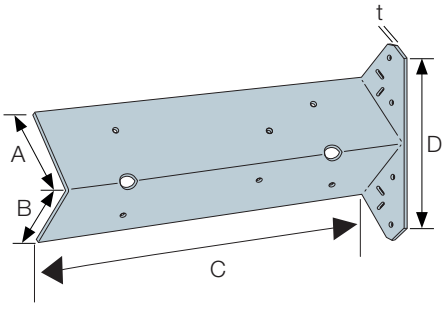

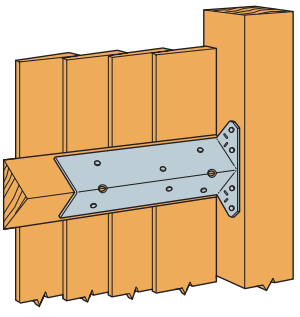

C-C-UK-2023 ©2023 SIMPSON STRONG-TIE COMPANY INC.

SPWG Square Plate Washer

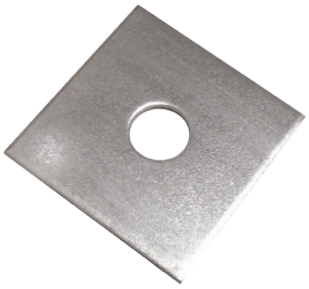

The SPWG adds strength to a bolted connection in timber.

Material: Pre-galvanised mild steel.

Product Dimensions

References	Dimensions [mm]	Hole Size
SPWGC50	50 x 50 x 2.5	Ø14

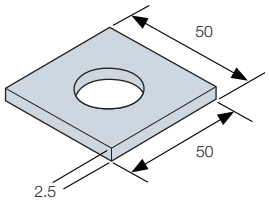

MP Mending Plate

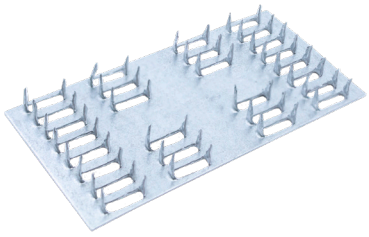

The MP is an easy to use connector for timber splices, no nails required. For non-structural applications only; **not for truss applications.**

Material: Pre-galvanised mild steel.

Product Dimensions

References	Dimensions	
	A [mm]	B [mm]
MP14	25	100
MP24	50	100
MP36	75	150

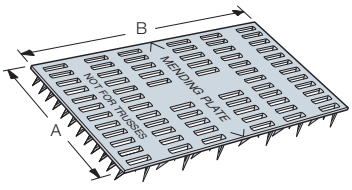

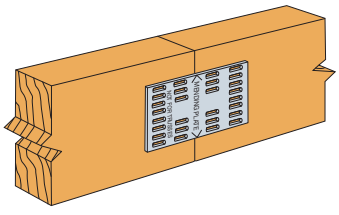

NS Nail Stopper

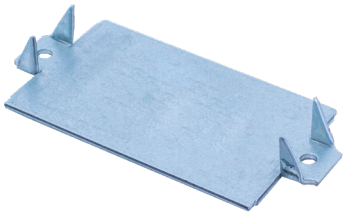

The NS prevents nails/screws from piercing water pipes and electrical cables.

Installation: Installs over utilities passing through timber studs.

Material: Pre-galvanised mild steel.

Product Dimensions

References	Dimensions [mm]		Holes
	A	B	Ø4
NS1	38	75	2
NS2	38	150	2

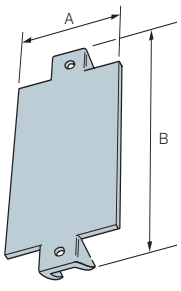

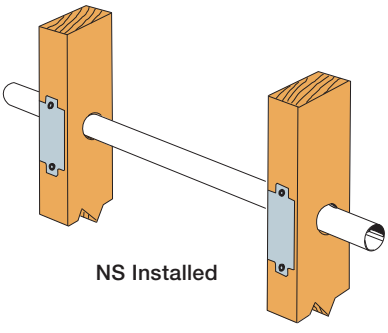

NS Installed

C-C-UK-2023 ©2023 SIMPSON STRONG-TIE COMPANY INC.

AT-HP High Performance Resin

The AT-HP is a styrene free methacrylate resin suitable for use with threaded rods into concrete.

Easy to dispense and fast curing, it's specially designed for structural fixings and construction uses.

Features: Changes colour as it cures; once it has turned grey, it indicates that it is safe to work with the installed rod.

- Styrene free.
- ETA approved for threaded rod installations.
- Changes colour as it cures.
- Low odour.
- Non-flammable.
- 2 mixing nozzles supplied.

Product Information

References	Cartridge Size
ATHP300BG-UK	300 ml
ATHP420BG-UK	420 ml

Method of Cleaning Holes

Manual Cleaning	Compressed Air Cleaning
4x blowing - 4x brushes - 4x blowing	2x blowing - 2x brushing - 2x blowing

- Note: Compressed air to be min. 6 bar, 100 litre/minute, oil free

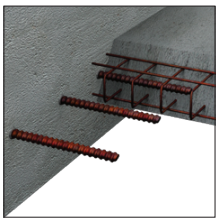

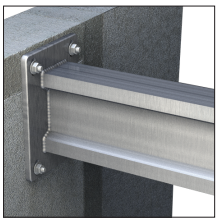

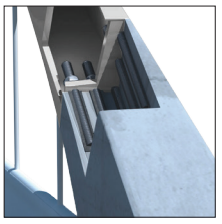

Installation

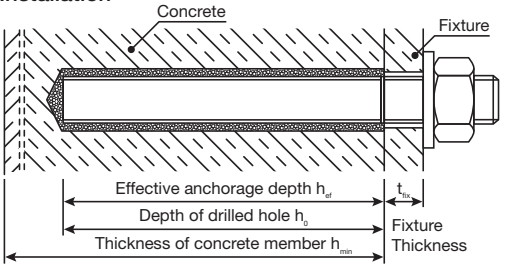

Curing Schedule

Support Material Temperature $T_{base\ material}$	Working Time t_{gel}	Curing Time (Dry Concrete) $t_{cure,dry}$	Curing Time (Wet Concrete) $t_{cure,wet}$
$0°C \leq T_{base\ material} < +5°C$	25 min	90 min	3:00 h
$5°C \leq T_{base\ material} < +10°C$	17 min	70 min	2:20 h
$10°C \leq T_{base\ material} < +20°C$	12 min	65 min	2:10 h
$20°C \leq T_{base\ material} < +30°C$	6 min	60 min	2:00 h
$30°C \leq T_{base\ material} < +40°C$	3 min	45 min	1:30 h

- Note: Cartridge temperature: <20°C

Installation Data

• Wet or dry concete (use category 1). • Overhead installation not permitted.			M8		M10		M12		M16		M20		M24	
			Steel	A4	Steel	A4	Steel	A4	Steel	A4	Steel	A4	Steel	A4
Nominal drill hole diameter	d_0	[mm]	10		12		14		18		24		28	
Cylindrical drill hole depth	$h_0 \geq$	[mm]	64		80		96		128		160		192	
Diameter of clearence hole of the fixture	d_f	[mm]	9		12		14		18		22		26	
Diameter of steel brush	$d_{b,nom}$	[mm]	12		14		16		20		26		30	
Width across flats DIN 934 (ISO 4032)	S_W	[mm]	13		17(16)		19(18)		24		30		36	
Installation torque (max.)	$T_{inst,\ max}$	[Nm]	10		20		30		60		90		140	

Spacing, Edge Distance and Member Thickness

			M8		M10		M12		M16		M20		M24	
			Steel	A4	Steel	A4	Steel	A4	Steel	A4	Steel	A4	Steel	A4
Effective embedment depth	$h_{ef,min}$	[mm]	60		60		70		80		90		100	
	$h_{ef,max}$	[mm]	160		200		240		320		400		480	
Effective embedment depth (8d)	$h_{ef,8d}$	[mm]	64		80		96		128		160		192	
Characteristic spacing	$S_{cr,}$	[mm]	192		240		288		384		480		576	
Minimum spacing	s_{min}	[mm]	40		50		60		80		100		120	
Characteristic edge distance	$c_{cr,N}$	[mm]	96		120		144		192		240		288	
Minimum edge distance	c_{min}	[mm]	40		50		60		80		100		120	
Minimum member thickness	h_{min}	[mm]	100		110		126		164		208		248	

C-C-UK-2023 ©2023 SIMPSON STRONG-TIE COMPANY INC.

AT-HP High Performance Resin

SIMPSON Strong-Tie®

Basic load data for single anchor with no influence of edge distances and spacings [4) 7)] / Design Method EOTA TR 029

Characteristic Resistance [1), 8)] h_{ef} = 8d [mm]					M8		M10		M12		M16		M20		M24	
					5.8	A4-70	5.8	A4-70	5.8	A4-70	5.8	A4-70	5.8	A4-70	5.8	A4-70
					64		80		96		128		160		192	
Cracked Concrete (T1 - 24°C/40°C)	C20/25	Tension	N_{RK}	[kN]	-	-	-	-	12.7	12.7	22.5	22.5	-	-	-	-
	C30/37				-	-	-	-	13.2	13.2	23.4	23.4	-	-	-	-
	C40/50				-	-	-	-	13.5	13.5	24.1	24.1	-	-	-	-
	C50/60				-	-	-	-	13.8	13.8	24.5	24.5	-	-	-	-
	C20/25	Shear [5)]	V_{RK}	[kN]	-	-	-	-	21.0	25.3	39.0	45.0	-	-	-	-
	C30/37				-	-	-	-	21.0	26.3	39.0	46.8	-	-	-	-
	C40/50				-	-	-	-	21.0	27.1	39.0	48.2	-	-	-	-
	C50/60				-	-	-	-	21.0	27.6	39.0	49.1	-	-	-	-
Non-Cracked Concrete [6)] (T1 - 24°C/40°C)	C20/25	Tension	N_{RK}	[kN]	16.1	16.1	23.9	23.9	32.6	32.6	51.4	51.4	75.4	75.4	101.3	101.3
	C30/37				18.0	18.0	26.7	26.7	36.5	36.5	57.6	57.6	84.4	84.4	113.4	113.4
	C40/50				18.0	19.8	29.0	29.4	40.0	40.0	63.3	63.3	92.7	92.7	124.6	124.6
	C50/60				18.0	20.9	29.0	31.0	42.0	42.3	66.9	66.9	98.0	98.0	131.7	131.7
	C20/25	Shear [5)]	V_{RK}	[kN]	9.0	13.0	15.0	20.0	21.0	30.0	39.0	55.0	61.0	86.0	88.0	124.0
	C30/37				9.0	13.0	15.0	20.0	21.0	30.0	39.0	55.0	61.0	86.0	88.0	124.0
	C40/50				9.0	13.0	15.0	20.0	21.0	30.0	39.0	55.0	61.0	86.0	88.0	124.0
	C50/60				9.0	13.0	15.0	20.0	21.0	30.0	39.0	55.0	61.0	86.0	88.0	124.0
Bending Moment			$M^0_{Rk,s}$	[Nm]	19.0	26.0	37.0	53.0	66.0	92.0	167.0	233.0	326.0	454.0	561.0	784.0

Design Resistance [1), 2), 8)] h_{ef} = 8d [mm]					M8		M10		M12		M16		M20		M24	
					5.8	A4-70	5.8	A4-70	5.8	A4-70	5.8	A4-70	5.8	A4-70	5.8	A4-70
					64		80		96		128		160		192	
Cracked Concrete (T1 - 24°C/40°C)	C20/25	Tension	N_{Rd}	[kN]	-	-	-	-	8.4	8.4	15.0	15.0	-	-	-	-
	C30/37				-	-	-	-	8.8	8.8	15.6	15.6	-	-	-	-
	C40/50				-	-	-	-	9.0	9.0	16.1	16.1	-	-	-	-
	C50/60				-	-	-	-	9.2	9.2	16.4	16.4	-	-	-	-
	C20/25	Shear [5)]	V_{Rd}	[kN]	-	-	-	-	16.8	16.9	30.0	30.0	-	-	-	-
	C30/37				-	-	-	-	16.8	17.6	31.2	31.2	-	-	-	-
	C40/50				-	-	-	-	16.8	18.1	31.2	32.1	-	-	-	-
	C50/60				-	-	-	-	16.8	18.4	31.2	32.7	-	-	-	-
Non-Cracked Concrete [6)] (T1 - 24°C/40°C)	C20/25	Tension	N_{Rd}	[kN]	10.7	10.7	15.9	15.9	21.7	21.7	34.3	34.3	50.2	50.2	67.5	67.5
	C30/37				12.0	12.0	17.8	17.8	24.3	24.3	38.4	38.4	56.3	56.3	75.6	75.6
	C40/50				12.0	13.2	19.3	19.6	26.7	26.7	42.2	42.2	61.8	61.8	83.1	83.1
	C50/60				12.0	13.9	19.3	20.7	28.0	28.2	44.6	44.6	65.3	65.3	87.8	87.8
	C20/25	Shear [5)]	V_{Rd}	[kN]	7.2	8.3	12.0	12.8	16.8	19.2	31.2	35.3	48.8	55.1	70.4	79.5
	C30/37				7.2	8.3	12.0	12.8	16.8	19.2	31.2	35.3	48.8	55.1	70.4	79.5
	C40/50				7.2	8.3	12.0	12.8	16.8	19.2	31.2	35.3	48.8	55.1	70.4	79.5
	C50/60				7.2	8.3	12.0	12.8	16.8	19.2	31.2	35.3	48.8	55.1	70.4	79.5
Bending Moment			M_{Rd}	[Nm]	15.2	16.7	29.6	34.0	52.8	59.0	133.6	149.4	260.8	291.0	448.8	502.6

Recommended Loads [1), 3), 8)] h_{ef} = 8d [mm]					M8		M10		M12		M16		M20		M24	
					5.8	A4-70	5.8	A4-70	5.8	A4-70	5.8	A4-70	5.8	A4-70	5.8	A4-70
					64		80		96		128		160		192	
Cracked Concrete (T1 - 24°C/40°C)	C20/25	Tension	N_{Rec}	[kN]	-	-	-	-	6.0	6.0	10.7	10.7	-	-	-	-
	C30/37				-	-	-	-	6.3	6.3	11.1	11.1	-	-	-	-
	C40/50				-	-	-	-	6.5	6.5	11.5	11.5	-	-	-	-
	C50/60				-	-	-	-	6.6	6.6	11.7	11.7	-	-	-	-
	C20/25	Shear [5)]	V_{Rec}	[kN]	-	-	-	-	12.0	12.1	21.4	21.4	-	-	-	-
	C30/37				-	-	-	-	12.0	12.5	22.3	22.3	-	-	-	-
	C40/50				-	-	-	-	12.0	12.9	22.3	22.9	-	-	-	-
	C50/60				-	-	-	-	12.0	13.1	22.3	23.4	-	-	-	-
Non-Cracked Concrete [6)] (T1 - 24°C/40°C)	C20/25	Tension	N_{Rec}	[kN]	7.7	7.7	11.4	11.4	15.5	15.5	24.5	24.5	35.9	35.9	48.2	48.2
	C30/37				8.6	8.6	12.7	12.7	17.4	17.4	27.4	27.4	40.2	40.2	54.0	54.0
	C40/50				8.6	9.4	13.8	14.0	19.1	19.1	30.1	30.1	44.1	44.1	59.3	59.3
	C50/60				8.6	9.9	13.8	14.8	20.0	20.2	31.8	31.8	46.7	46.7	62.7	62.7
	C20/25	Shear [5)]	V_{Rec}	[kN]	5.1	6.0	8.6	9.2	12.0	13.7	22.3	25.2	34.9	39.4	50.3	56.8
	C30/37				5.1	6.0	8.6	9.2	12.0	13.7	22.3	25.2	34.9	39.4	50.3	56.8
	C40/50				5.1	6.0	8.6	9.2	12.0	13.7	22.3	25.2	34.9	39.4	50.3	56.8
	C50/60				5.1	6.0	8.6	9.2	12.0	13.7	22.3	25.2	34.9	39.4	50.3	56.8
Bending Moment			M_{Rec}	[Nm]	10.9	11.9	21.1	24.3	37.7	42.1	95.4	106.7	186.3	207.9	320.6	359.0

1) Steel failure decisive.
2) The design resistances have been calculated using the partial safety factors for resistances stated in the ETA-19/0265.
3) The recommended loads have been calculated using the partial safety factors for resistances stated in ETA-19/0265 and with a partial safety factor for actions of γ_F=1.4.
4) The load figures are valid for unreinforced concrete and reinforced concrete with a rebar spacing s ≥ 15 cm (any diameter) or with a rebar spacing s ≥ 10 cm, if the rebar diameter is 10 mm or smaller.
5) The figures for shear loads are based on a single anchor without influence of concrete edges.
6) Concrete is considered non-cracked when the tensile stress within the concrete is $\sigma_L + \sigma_R \leq 0$. In the absence of detailed verification σ_R = 3 N/mm² can be assumed (σ_L equals the tensile stress within the concrete induced by external loads, anchor loads included).
7) For combined tension and shear loads or anchor groups and/or in case of edge influence, a calculation per TR 029, design method A or CEN/TS 1992-4-5 shall be performed. For details see ETA-19/0265.
8) Values for temperature range T1: 24°C/40°C: -40°C to +40°C (max.long term temperature: +24°C; max. short term temperature: +40°C)

C-C-UK-2023 ©2023 SIMPSON STRONG-TIE COMPANY INC.

POLY-GP General Purpose Resin

The POLY-GP is a styrene-free polyester resin specially formulated for light or medium duty fixings in concrete.

Easy to use and fast curing, it enables good performance when used in applications such as fixing architectural steelwork, cable trays, hand rails and gates.

- Styrene free.
- Non-flammable.
- 300ml tubes.

Product Information

References	Cartridge Size
PolyGP300BG-UK	300ml

Method of Cleaning Holes

Manual Cleaning	Compressed Air Cleaning
4x blowing - 4x brushes - 4x blowing	2x blowing - 2x brushing - 2x blowing

- Note: Compressed air to be min. 6 bar, 100 litre/minute, oil free

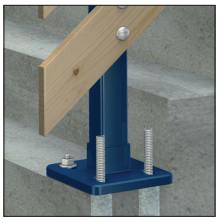
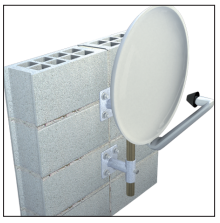

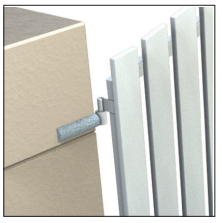

Curing Schedule

Support Material Temperature $T_{base\ material}$	Working Time t_{gel}	Curing Time (Dry Concrete) $t_{cure,dry}$	Curing Time (Wet Concrete) $t_{cure,wet}$
$0°C \le T_{base\ material} < 10°C$	20min	90 min	3:00 h
$10°C \le T_{base\ material} < 20°C$	9 min	60 min	2:10 h
$20°C \le T_{base\ material} < 30°C$	5 min	30 min	1:00 h
$30°C \le T_{base\ material} < 40°C$	3 min	20 min	40 min

- Note: Cartridge temperature: <20°C

Installation

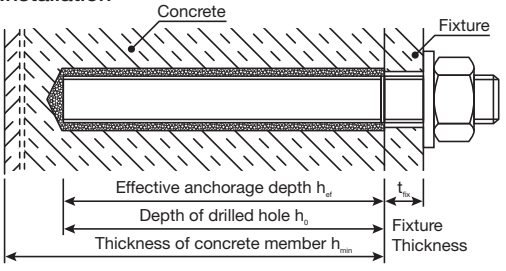

Guide to spacings, edge distances

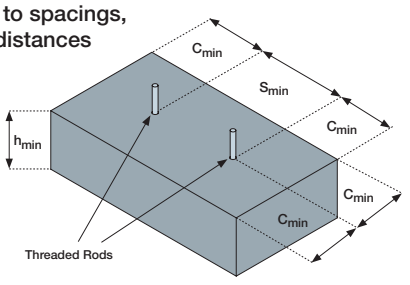

Spacing, Edge Distance and Member Thickness (h_{ef} = 8d)

			M8		M10		M12		M16	
			Steel	A4	Steel	A4	Steel	A4	Steel	A4
Effective embedment depth	$h_{ef,min}$	[mm]	60		60		70		80	
	$h_{ef,max}$		160		200		240		320	
Effective embedment depth (8d)	$h_{ef,8d}$	[mm]	64		80		96		128	
Characteristic spacing	$S_{cr,}$	[mm]	192		240		288		384	
Minimum spacing	s_{min}	[mm]	32		40		48		64	
Characteristic edge distance	$c_{cr,N}$	[mm]	96		120		144		192	
Minimum edge distance	c_{min}	[mm]	32		40		48		64	
Minimum member thickness (8d)	h_{min}	[mm]	100		110		126		164	

C-C-UK-2023 ©2023 SIMPSON STRONG-TIE COMPANY INC.

POLY-GP General Purpose Resin

SIMPSON Strong-Tie

Basic load data for single anchor with no influence of edge distances and spacings [4) 7)] (h_{ef} = 8d)

Characteristic Resistance [1), 8)] h_{ef} = 8d [mm]					M8		M10		M12		M16	
					5.8	A4-70	5.8	A4-70	5.8	A4-70	5.8	A4-70
					64		80		96		128	
Non-Cracked Concrete [6)] (T1 - 24°C/40°C)	C20/25	Tension	N_{RK}	[kN]	9.6	9.6	13.8	13.8	18.1	18.1	25.7	25.7
	C30/37				10.4	10.4	14.9	14.9	19.5	19.5	27.8	27.8
	C40/50				11.1	11.1	15.9	15.9	20.8	20.8	29.6	29.6
	C50/60				11.5	11.5	16.4	16.4	21.5	21.5	30.6	30.6
	C20/25	Shear [5)]	V_{RK}	[kN]	9.0	13.0	15.0	20.0	21.0	30.0	39.0	51.4
	C30/37				9.0	13.0	15.0	20.0	21.0	30.0	39.0	55.0
	C40/50				9.0	13.0	15.0	20.0	21.0	30.0	39.0	55.0
	C50/60				9.0	13.0	15.0	20.0	21.0	30.0	39.0	55.0
Bending Moment			$M^0_{Rk,s}$	[Nm]	19.0	26.0	37.0	53.0	66.0	92.0	167.0	233.0

Design Resistance [1), 2), 8)] h_{ef} = 8d [mm]					M8		M10		M12		M16	
					5.8	A4-70	5.8	A4-70	5.8	A4-70	5.8	A4-70
					64		80		96		128	
Non-Cracked Concrete [6)] (T1 - 24°C/40°C)	C20/25	Tension	N_{Rd}	[kN]	4.6	4.6	7.7	7.7	10.0	10.0	14.3	14.3
	C30/37				5.0	5.0	8.3	8.3	10.9	10.9	15.4	15.4
	C40/50				5.3	5.3	8.8	8.8	11.6	11.6	16.4	16.4
	C50/60				5.5	5.5	9.1	9.1	12.0	12.0	17.0	17.0
	C20/25	Shear [5)]	V_{Rd}	[kN]	7.2	8.3	12.0	12.8	16.8	19.2	31.2	34.3
	C30/37				7.2	8.3	12.0	12.8	16.8	19.2	31.2	35.3
	C40/50				7.2	8.3	12.0	12.8	16.8	19.2	31.2	35.3
	C50/60				7.2	8.3	12.0	12.8	16.8	19.2	31.2	35.3
Bending Moment			M_{Rd}	[Nm]	15.2	16.7	29.6	34.0	52.8	59.0	133.6	149.4

Recommended Loads [1), 3), 8)] h_{ef} = 8d [mm]					M8		M10		M12		M16	
					5.8	A4-70	5.8	A4-70	5.8	A4-70	5.8	A4-70
					64		80		96		128	
Non-Cracked Concrete [6)] (T1 - 24°C/40°C)	C20/25	Tension	N_{Rec}	[kN]	3.3	3.3	5.5	5.5	7.2	7.2	10.2	10.2
	C30/37				3.5	3.5	5.9	5.9	7.8	7.8	11.0	11.0
	C40/50				3.8	3.8	6.3	6.3	8.3	8.3	11.7	11.7
	C50/60				3.9	3.9	6.5	6.5	8.5	8.5	12.1	12.1
	C20/25	Shear [5)]	V_{Rec}	[kN]	5.1	6.0	8.6	9.2	12.0	13.7	22.3	24.5
	C30/37				5.1	6.0	8.6	9.2	12.0	13.7	22.3	25.2
	C40/50				5.1	6.0	8.6	9.2	12.0	13.7	22.3	25.2
	C50/60				5.1	6.0	8.6	9.2	12.0	13.7	22.3	25.2
Bending Moment			M_{Rec}	[Nm]	10.9	11.9	21.1	24.3	37.7	42.1	95.4	106.7

1) Steel failure decisive.
2) The design resistances have been calculated using the partial safety factors for resistances stated in the ETA-19/0421.
3) The recommended loads have been calculated using the partial safety factors for resistances stated in ETA-19/0421 and with a partial safety factor for actions of γ_F=1.4.
4) The load figures are valid for unreinforced concrete and reinforced concrete with a rebar spacing s ≥ 15 cm (any diameter) or with a rebar spacing s ≥ 10 cm, if the rebar diameter is 10 mm or smaller.
5) The figures for shear loads are based on a single anchor without influence of concrete edges.
6) Concrete is considered non-cracked when the tensile stress within the concrete is $\sigma_L + \sigma_R \leq 0$. In the absence of detailed verification σ_R = 3 N/mm² can be assumed (σ_L equals the tensile stress within the concrete induced by external loads, anchors loads included).
7) For combined tension and shear loads or anchor groups and/or in case of edge influence, a calculation per EN 1992-4 shall be performed. For details see ETA-19/0421.
8) Values for temperature range T1: 24°C/40°C: -40°C to +40°C (max.long term temperature: +24°C; max. short term temperature: +40°C). Dry or wet concrete (Use category 1).

Installation Data (h_{ef} = 8d)

• Wet or dry concete (use category 1). • Flooded holes except sea water (Use category 2). • Overhead installation permitted.			M8		M10		M12		M16	
			Steel	A4	Steel	A4	Steel	A4	Steel	A4
Nominal drill hole diameter	d_0	[mm]	10		12		14		18	
Cylindrical drill hole depth	$h_0 \geq$	[mm]	64		80		96		128	
Diameter of clearence hole of the fixture	d_f	[mm]	9		12		14		18	
Diameter of steel brush	$d_{b,nom}$	[mm]	12		14		16		20	
Width across flats DIN 934 (ISO 4032)	S_W	[mm]	13		17(16)		19(18)		24	
Installation torque (max.)	$T_{inst, max}$	[Nm]	8		10		15		25	

C-C-UK-2023 ©2023 SIMPSON STRONG-TIE COMPANY INC.

POLY-GP General Purpose Resin

SIMPSON Strong-Tie

Basic load data for single anchor with no influence of edge distances and spacings [4) 7)] (h_{ef} = 12d)

Characteristic Resistance [1), 8)] h_{ef} = 12d [mm]					M8		M10		M12		M16	
					5.8	A4-70	5.8	A4-70	5.8	A4-70	5.8	A4-70
					64		80		96		128	
Non-Cracked Concrete [6)] (T1 - 24°C/40°C)	C20/25	Tension	N_{RK}	[kN]	14.5	14.5	20.7	20.7	27.1	27.1	38.6	38.6
	C30/37				15.6	15.6	22.4	22.4	29.3	29.3	41.7	41.7
	C40/50				16.6	16.6	23.8	23.8	31.2	31.2	44.4	44.4
	C50/60				17.2	17.2	24.7	24.7	32.3	32.3	45.9	45.9
	C20/25	Shear [5)]	V_{RK}	[kN]	9.0	13.0	15.0	20.0	21.0	30.0	39.0	51.4
	C30/37				9.0	13.0	15.0	20.0	21.0	30.0	39.0	55.0
	C40/50				9.0	13.0	15.0	20.0	21.0	30.0	39.0	55.0
	C50/60				9.0	13.0	15.0	20.0	21.0	30.0	39.0	55.0
Bending Moment			$M^0_{Rk,s}$	[Nm]	19.0	26.0	37.0	53.0	66.0	92.0	167.0	233.0

Design Resistance [1), 2), 8)] h_{ef} = 12d [mm]					M8		M10		M12		M16	
					5.8	A4-70	5.8	A4-70	5.8	A4-70	5.8	A4-70
					64		80		96		128	
Non-Cracked Concrete [6)] (T1 - 24°C/40°C)	C20/25	Tension	N_{Rd}	[kN]	6.9	6.9	11.5	11.5	15.1	15.1	21.4	21.4
	C30/37				7.4	7.4	12.4	12.4	16.3	16.3	23.2	23.2
	C40/50				7.9	7.9	13.2	13.2	17.3	17.3	24.7	24.7
	C50/60				8.2	8.2	13.7	13.7	17.9	17.9	25.5	25.5
	C20/25	Shear [5)]	V_{Rd}	[kN]	7.2	8.3	12.0	12.8	16.8	19.2	31.2	34.3
	C30/37				7.2	8.3	12.0	12.8	16.8	19.2	31.2	35.3
	C40/50				7.2	8.3	12.0	12.8	16.8	19.2	31.2	35.3
	C50/60				7.2	8.3	12.0	12.8	16.8	19.2	31.2	35.3
Bending Moment			M_{Rd}	[Nm]	15.2	16.7	29.6	34.0	52.8	59.0	133.6	149.4

Recommended Loads [1), 3), 8)] h_{ef} = 12d [mm]					M8		M10		M12		M16	
					5.8	A4-70	5.8	A4-70	5.8	A4-70	5.8	A4-70
					64		80		96		128	
Non-Cracked Concrete [6)] (T1 - 24°C/40°C)	C20/25	Tension	N_{Rec}	[kN]	4.9	4.9	8.2	8.2	10.8	10.8	15.3	15.3
	C30/37				5.3	5.3	8.9	8.9	11.6	11.6	16.5	16.5
	C40/50				5.7	5.7	9.5	9.5	12.4	12.4	17.6	17.6
	C50/60				5.9	5.9	9.8	9.8	12.8	12.8	18.2	18.2
	C20/25	Shear [5)]	V_{Rec}	[kN]	5.1	6.0	8.6	9.2	12.0	13.7	22.3	24.5
	C30/37				5.1	6.0	8.6	9.2	12.0	13.7	22.3	25.2
	C40/50				5.1	6.0	8.6	9.2	12.0	13.7	22.3	25.2
	C50/60				5.1	6.0	8.6	9.2	12.0	13.7	22.3	25.2
Bending Moment			M_{Rec}	[Nm]	10.9	11.9	21.1	24.3	37.7	42.1	95.4	106.7

Installation data (h_{ef} = 12d)

• Wet or dry concete (use category 1). • Flooded holes except sea water (Use category 2). • Overhead installation permitted.			M8		M10		M12		M16	
			Steel	A4	Steel	A4	Steel	A4	Steel	A4
Nominal drill hole diameter	d_0	[mm]	10		12		14		18	
Cylindrical drill hole depth	$h_0 \geq$	[mm]	96		120		144		192	
Diameter of clearence hole of the fixture	d_f	[mm]	9		12		14		18	
Diameter of steel brush	$d_{b,nom}$	[mm]	12		14		16		20	
Width across flats DIN 934 (ISO 4032)	S_W	[mm]	13		17(16)		19(18)		24	
Installation torque (max.)	$T_{inst,\ max}$	[Nm]	8		10		15		25	

Spacing, Edge Distance and Member Thickness (h_{ef} = 12d)

			M8		M10		M12		M16	
			Steel	A4	Steel	A4	Steel	A4	Steel	A4
Effective embedment depth	$h_{ef,min}$	[mm]	60		60		70		80	
	$h_{ef,max}$	[mm]	160		200		240		320	
Effective embedment depth (8d)	$h_{ef,8d}$	[mm]	96		120		144		192	
Characteristic spacing	$S_{cr,}$	[mm]	288		360		432		576	
Minimum spacing	s_{min}	[mm]	48		60		72		96	
Characteristic edge distance	$c_{cr,N}$	[mm]	144		180		216		288	
Minimum edge distance	c_{min}	[mm]	48		60		72		96	
Minimum member thickness (8d)	h_{min}	[mm]	126		150		174		228	

C-C-UK-2023 ©2023 SIMPSON STRONG-TIE COMPANY INC.

LMAS Threaded Rod

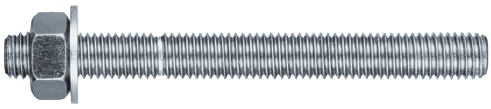

The LMAS threaded rods are intended to be used in conjunction with AT-HP or Poly GP resins.

Zinc plated LMAS threaded rods are supplied in boxes (including nuts and washers).

Material: Zinc plated steel, grade 5.8.

Product Dimensions

References	Code	Dimensions [mm]		Fixture & Hole Dimensions [mm]			
		d	l	Max Fixture Thickness	Max hole diameter within Fixture	Embedment Depth	Drilled Hole Size
				t_{fix}	d_f	h_{eff}	d_{eff} x h_f
LMAS M8 x 95	LMAS0810064020	M8	95	20	10	64	10 x 64
LMAS M10 x 110	LMAS1016085010	M10	110	10	12	85	12 x 85
LMAS M10 x 130	LMAS1012090025	M10	130	25	12	90	12 x 90
LMAS M10 x 150	LMAS1016085050	M10	150	50	12	85	12 x 85
LMAS M12 x 120	LMAS1216085015	M12	120	15	14	85	14 x 85
LMAS M12 x 150	LMAS1214100035	M12	150	35	14	100	14 x 100
LMAS M12 x 185	LMAS1214100070	M12	185	70	14	100	14 x 100
LMAS M16 x 170	LMAS1618130020	M16	170	20	18	130	18 x 130
LMAS M16 x 200	LMAS1618130050	M16	200	50	18	130	18 x 130
LMAS M20 x 245	LMAS2025170050	M20	245	50	22	170	22 x 170
LMAS M24 x 310	LMAS2428210070	M24	310	70	26	210	26 x 210

Zinc-plated steel

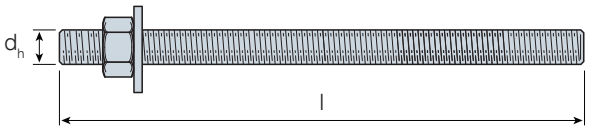

C-C-UK-2023 ©2023 SIMPSON STRONG-TIE COMPANY INC.

DT Resin Dispensing Tool

We provide the tools to ensure the best preparation and effortless installation of resins and threaded rods.

Unlike ordinary cartridge guns, the DT300 and DT380 are machined to cope with the heavier duty demands of concrete resins, dispensing smoothly with less effort.

- Options to suit 300ml and 420ml cartridge sizes.

Product Information

References	To Suit
DT300	300ml Cartridge
DT380	420ml Cartridge

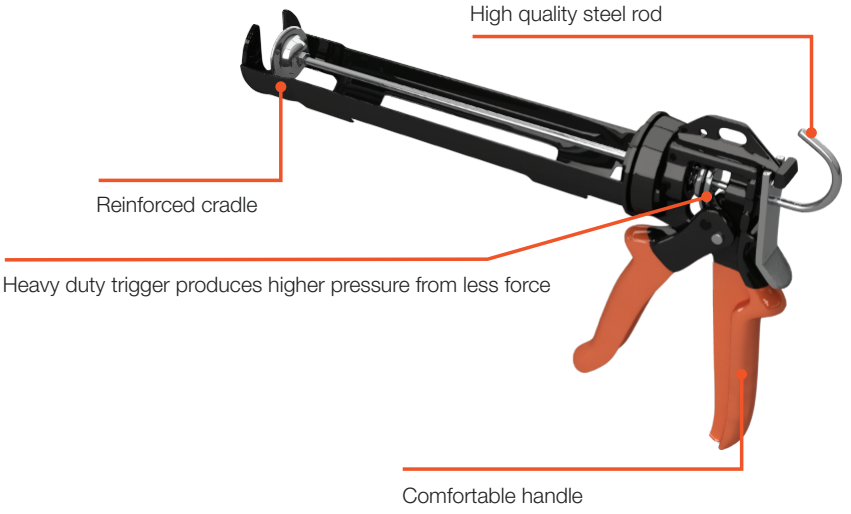

C-C-UK-2023 ©2023 SIMPSON STRONG-TIE COMPANY INC.

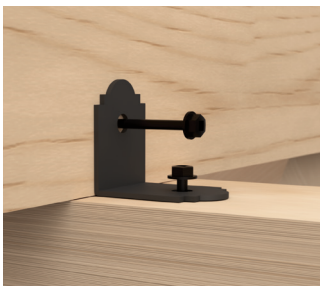

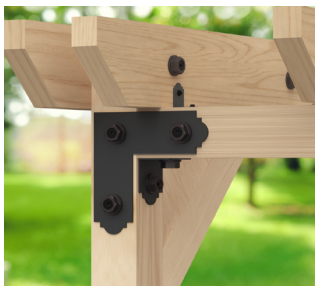

Timeless Outdoor Living, in No Time at All

Introducing the Mission Collection®, a complete line of decorative wood connectors and fasteners from Simpson Strong-Tie® that bring both design elegance and structural strength to outdoor living areas.

Part of our Design Series range, the Mission Collection®, features arched profile connectors with a weather resistant powder coating that add a touch of vintage flair for years to come. Accommodating a variety of popular timber sizes, they provide the flexibility you need to design and build custom outdoor structures with ease.

For pergola perfection or garden bench bliss, visit **strongtie.co.uk/outdoor-living**

SIMPSON Strong-Tie®

SIMPSON Strong-Tie®

C-C-UK-2023
Effective 01/01/2023

© 2023 Simpson Strong-Tie®

Cardinal Point, Winchester Road, Tamworth, Staffordshire, B78 3HG
01827 255600 | strongtie.co.uk